Lampiran 1 Hasil Uji Ahli

| Variabel | Ahli | | Ahli I | | Validitas |
|---|---|---|---|---|---|
| | | | Tidak Relevan | Relevan | |
| Seleksi terbuka | Ahli II | Tidak Relevan | 6 | | 0,92 |
| | | Relevan | 21 | 1,2,3,4,5,7,8,9,10,11,12,13,14,15,16,17,18,19,20,22,23,24,25,26 | |

| Variabel | Ahli | | Ahli I | | Validitas |
|---|---|---|---|---|---|
| | | | Tidak Relevan | Relevan | |
| Kepemimpinan transfor-masional | Ahli II | Tidak Relevan | 33 | | 0,97 |
| | | Relevan | | 1,2,3,4,5,7,8,9,10,11,12,13,14,15,16,17,18,19,20,21,22,23,24,25,26,27,28,29,30,31,32,34,35 | |

| Variabel | Ahli | | Ahli I | | Validitas |
|---|---|---|---|---|---|
| | | | Tidak Relevan | Relevan | |
| Kepuasan Kerja | Ahli II | Tidak Relevan | 14 | | 0,95 |
| | | Relevan | | 1,2,3,4,5,7,8,9,10,11,12,13,15,16,17,18,19,20,22 | |

| Variabel | Ahli | | Ahli I | | Validitas |
|---|---|---|---|---|---|
| | | | Tidak Relevan | Relevan | |
| Motivasi Kerja | Ahli II | Tidak Relevan | 10,25 | | 0,93 |
| | | Relevan | | 1,2,3,4,5,7,8,9,11,12,13,14,15 ,16,17,18,19,20,21,22,23,24, ,26,27,28,29, | |

| Variabel | Ahli | | Ahli I | | Validitas |
|---|---|---|---|---|---|
| | | | Tidak Relevan | Relevan | |
| Kinerja Pegawai | Ahli II | Tidak Relevan | 12 | | 0,96 |
| | | Relevan | | 1,2,3,4,5,7,8,9,10,11,13,1 4,15,16,17,18,19,20,21,22 ,23,24,25,26,27,28 | |

Lampiran 2 Pengujian Instrumen Penelitian Variabel Seleksi Terbuka

| | | S1 | S2 | S3 | S4 | S5 | S6 | S7 | S8 | S9 | S10 | S11 | S12 | S13 | S14 | S15 | S16 |
|---|---|---|---|---|---|---|---|---|---|---|---|---|---|---|---|---|---|
| S1 | Pearson Correlation | 1 | .346* | .323* | .024 | .499** | .339* | .430** | .329* | .483** | .608** | .334* | .569** | .583** | .422** | .239 | .512** |
| | Sig. (2-tailed) | | .020 | .030 | .876 | .000 | .023 | .003 | .027 | .001 | .000 | .025 | .000 | .000 | .004 | .114 | .000 |
| | N | 45 | 45 | 45 | 45 | 45 | 45 | 45 | 45 | 45 | 45 | 45 | 45 | 45 | 45 | 45 | 45 |
| S2 | Pearson Correlation | .346* | 1 | .364* | -.004 | .364* | .167 | .225 | .094 | .442** | .485** | .434** | .360* | .552** | .502** | .330* | .468** |
| | Sig. (2-tailed) | .020 | | .014 | .978 | .014 | .274 | .138 | .540 | .002 | .001 | .003 | .015 | .000 | .000 | .027 | .001 |
| | N | 45 | 45 | 45 | 45 | 45 | 45 | 45 | 45 | 45 | 45 | 45 | 45 | 45 | 45 | 45 | 45 |
| S3 | Pearson Correlation | .323* | .364* | 1 | .112 | .094 | .545** | .403** | .551** | .388** | .364* | .547** | .377* | .352* | .461** | .554** | .471** |
| | Sig. (2-tailed) | .030 | .014 | | .463 | .541 | .000 | .006 | .000 | .009 | .014 | .000 | .011 | .018 | .001 | .000 | .001 |
| | N | 45 | 45 | 45 | 45 | 45 | 45 | 45 | 45 | 45 | 45 | 45 | 45 | 45 | 45 | 45 | 45 |
| S4 | Pearson Correlation | .024 | -.004 | .112 | 1 | .322* | .164 | .202 | .248 | .257 | .092 | .051 | .266 | .327* | .172 | .490** | .202 |
| | Sig. (2-tailed) | .876 | .978 | .463 | | .031 | .283 | .184 | .100 | .088 | .547 | .739 | .078 | .028 | .260 | .001 | .184 |
| | N | 45 | 45 | 45 | 45 | 45 | 45 | 45 | 45 | 45 | 45 | 45 | 45 | 45 | 45 | 45 | 45 |
| S5 | Pearson Correlation | .499** | .364* | .094 | .322* | 1 | .197 | .394** | -.037 | .252 | .465** | .386** | .465** | .616** | .284 | .370* | .298* |
| | Sig. (2-tailed) | .000 | .014 | .541 | .031 | | .194 | .007 | .807 | .095 | .001 | .009 | .001 | .000 | .058 | .012 | .047 |
| | N | 45 | 45 | 45 | 45 | 45 | 45 | 45 | 45 | 45 | 45 | 45 | 45 | 45 | 45 | 45 | 45 |
| S6 | Pearson Correlation | .339* | .167 | .545** | .164 | .197 | 1 | .334* | .727** | .417** | .354* | .633** | .352* | .227 | .477** | .473** | .393** |
| | Sig. (2-tailed) | .023 | .274 | .000 | .283 | .194 | | .025 | .000 | .004 | .017 | .000 | .018 | .133 | .001 | .001 | .008 |
| | N | 45 | 45 | 45 | 45 | 45 | 45 | 45 | 45 | 45 | 45 | 45 | 45 | 45 | 45 | 45 | 45 |
| S7 | Pearson Correlation | .430** | .225 | .403** | .202 | .394** | .334* | 1 | .181 | .386** | .306* | .347* | .583** | .402** | .226 | .282 | .314* |
| | Sig. (2-tailed) | .003 | .138 | .006 | .184 | .007 | .025 | | .234 | .009 | .041 | .019 | .000 | .006 | .135 | .061 | .036 |

| | | | | | | | | | | | | | | | | | |
|---|---|---|---|---|---|---|---|---|---|---|---|---|---|---|---|---|---|
| | N | 45 | 45 | 45 | 45 | 45 | 45 | 45 | 45 | 45 | 45 | 45 | 45 | 45 | 45 | 45 | 45 |
| S8 | Pearson Correlation | .329* | .094 | .551** | .248 | -.037 | .727** | .181 | 1 | .427** | .246 | .533** | .251 | .105 | .530** | .506** | .277 |
| | Sig. (2-tailed) | .027 | .540 | .000 | .100 | .807 | .000 | .234 | | .003 | .103 | .000 | .096 | .493 | .000 | .000 | .066 |
| | N | 45 | 45 | 45 | 45 | 45 | 45 | 45 | 45 | 45 | 45 | 45 | 45 | 45 | 45 | 45 | 45 |
| S9 | Pearson Correlation | .483** | .442** | .388** | .257 | .252 | .417** | .386** | .427** | 1 | .606** | .417** | .508** | .536** | .437** | .423** | .463** |
| | Sig. (2-tailed) | .001 | .002 | .009 | .088 | .095 | .004 | .009 | .003 | | .000 | .004 | .000 | .000 | .003 | .004 | .001 |
| | N | 45 | 45 | 45 | 45 | 45 | 45 | 45 | 45 | 45 | 45 | 45 | 45 | 45 | 45 | 45 | 45 |
| S10 | Pearson Correlation | .608** | .485** | .364* | .092 | .465** | .354* | .306* | .246 | .606** | 1 | .364* | .360* | .739** | .240 | .263 | .549** |
| | Sig. (2-tailed) | .000 | .001 | .014 | .547 | .001 | .017 | .041 | .103 | .000 | | .014 | .015 | .000 | .112 | .081 | .000 |
| | N | 45 | 45 | 45 | 45 | 45 | 45 | 45 | 45 | 45 | 45 | 45 | 45 | 45 | 45 | 45 | 45 |
| S11 | Pearson Correlation | .334* | .434** | .547** | .051 | .386** | .633** | .347* | .533** | .417** | .364* | 1 | .446** | .394** | .503** | .403** | .347* |
| | Sig. (2-tailed) | .025 | .003 | .000 | .739 | .009 | .000 | .019 | .000 | .004 | .014 | | .002 | .007 | .000 | .006 | .019 |
| | N | 45 | 45 | 45 | 45 | 45 | 45 | 45 | 45 | 45 | 45 | 45 | 45 | 45 | 45 | 45 | 45 |
| S12 | Pearson Correlation | .569** | .360* | .377* | .266 | .465** | .352* | .583** | .251 | .508** | .360* | .446** | 1 | .557** | .369* | .371* | .507** |
| | Sig. (2-tailed) | .000 | .015 | .011 | .078 | .001 | .018 | .000 | .096 | .000 | .015 | .002 | | .000 | .013 | .012 | .000 |
| | N | 45 | 45 | 45 | 45 | 45 | 45 | 45 | 45 | 45 | 45 | 45 | 45 | 45 | 45 | 45 | 45 |
| S13 | Pearson Correlation | .583** | .552** | .352* | .327* | .616** | .227 | .402** | .105 | .536** | .739** | .394** | .557** | 1 | .310* | .457** | .579** |
| | Sig. (2-tailed) | .000 | .000 | .018 | .028 | .000 | .133 | .006 | .493 | .000 | .000 | .007 | .000 | | .038 | .002 | .000 |
| | N | 45 | 45 | 45 | 45 | 45 | 45 | 45 | 45 | 45 | 45 | 45 | 45 | 45 | 45 | 45 | 45 |
| S14 | Pearson Correlation | .422** | .502** | .461** | .172 | .284 | .477** | .226 | .530** | .437** | .240 | .503** | .369* | .310* | 1 | .445** | .288 |
| | Sig. (2-tailed) | .004 | .000 | .001 | .260 | .058 | .001 | .135 | .000 | .003 | .112 | .000 | .013 | .038 | | .002 | .055 |
| | N | 45 | 45 | 45 | 45 | 45 | 45 | 45 | 45 | 45 | 45 | 45 | 45 | 45 | 45 | 45 | 45 |
| S15 | Pearson Correlation | .239 | .330* | .554** | .490** | .370* | .473** | .282 | .506** | .423** | .263 | .403** | .371* | .457** | .445** | 1 | .535** |

| | | | | | | | | | | | | | | | | | |
|---|---|---|---|---|---|---|---|---|---|---|---|---|---|---|---|---|---|
| | Sig. (2-tailed) | .114 | .027 | .000 | .001 | .012 | .001 | .061 | .000 | .004 | .081 | .006 | .012 | .002 | .002 | | .000 |
| | N | 45 | 45 | 45 | 45 | 45 | 45 | 45 | 45 | 45 | 45 | 45 | 45 | 45 | 45 | 45 | 45 |
| S16 | Pearson Correlation | .512** | .468** | .471** | .202 | .298* | .393** | .314* | .277 | .463** | .549** | .347* | .507** | .579** | .288 | .535** | 1 |
| | Sig. (2-tailed) | .000 | .001 | .001 | .184 | .047 | .008 | .036 | .066 | .001 | .000 | .019 | .000 | .000 | .055 | .000 | |
| | N | 45 | 45 | 45 | 45 | 45 | 45 | 45 | 45 | 45 | 45 | 45 | 45 | 45 | 45 | 45 | 45 |
| S17 | Pearson Correlation | .454** | .486** | .415** | .163 | .344* | .492** | .260 | .412** | .401** | .261 | .539** | .438** | .437** | .516** | .345* | .472** |
| | Sig. (2-tailed) | .002 | .001 | .005 | .284 | .021 | .001 | .085 | .005 | .006 | .084 | .000 | .003 | .003 | .000 | .020 | .001 |
| | N | 45 | 45 | 45 | 45 | 45 | 45 | 45 | 45 | 45 | 45 | 45 | 45 | 45 | 45 | 45 | 45 |
| S18 | Pearson Correlation | .030 | .361* | .556** | .102 | .191 | .430** | .198 | .243 | .210 | .239 | .416** | .165 | .282 | .264 | .430** | .314* |
| | Sig. (2-tailed) | .843 | .015 | .000 | .504 | .208 | .003 | .191 | .108 | .166 | .114 | .004 | .280 | .061 | .079 | .003 | .036 |
| | N | 45 | 45 | 45 | 45 | 45 | 45 | 45 | 45 | 45 | 45 | 45 | 45 | 45 | 45 | 45 | 45 |
| S19 | Pearson Correlation | .531** | .502** | .310* | .152 | .435** | .281 | .546** | .137 | .498** | .502** | .365* | .526** | .738** | .295* | .288 | .455** |
| | Sig. (2-tailed) | .000 | .000 | .038 | .320 | .003 | .061 | .000 | .369 | .001 | .000 | .014 | .000 | .000 | .049 | .055 | .002 |
| | N | 45 | 45 | 45 | 45 | 45 | 45 | 45 | 45 | 45 | 45 | 45 | 45 | 45 | 45 | 45 | 45 |
| S20 | Pearson Correlation | .405** | .522** | .377* | .356* | .369* | .587** | .355* | .538** | .585** | .441** | .579** | .394** | .557** | .431** | .623** | .431** |
| | Sig. (2-tailed) | .006 | .000 | .011 | .016 | .013 | .000 | .017 | .000 | .000 | .002 | .000 | .007 | .000 | .003 | .000 | .003 |
| | N | 45 | 45 | 45 | 45 | 45 | 45 | 45 | 45 | 45 | 45 | 45 | 45 | 45 | 45 | 45 | 45 |
| S21 | Pearson Correlation | .512** | .720** | .137 | .101 | .474** | .220 | .190 | .064 | .331* | .472** | .386** | .393** | .651** | .420** | .270 | .346* |
| | Sig. (2-tailed) | .000 | .000 | .371 | .509 | .001 | .146 | .210 | .676 | .026 | .001 | .009 | .008 | .000 | .004 | .072 | .020 |
| | N | 45 | 45 | 45 | 45 | 45 | 45 | 45 | 45 | 45 | 45 | 45 | 45 | 45 | 45 | 45 | 45 |
| S22 | Pearson Correlation | .520** | .485** | .147 | .285 | .465** | .229 | .306* | .195 | .442** | .485** | .223 | .522** | .552** | .306* | .263 | .387** |
| | Sig. (2-tailed) | .000 | .001 | .336 | .058 | .001 | .130 | .041 | .198 | .002 | .001 | .141 | .000 | .000 | .041 | .081 | .009 |
| | N | 45 | 45 | 45 | 45 | 45 | 45 | 45 | 45 | 45 | 45 | 45 | 45 | 45 | 45 | 45 | 45 |

| | | | | | | | | | | | | | | | | | |
|---|---|---|---|---|---|---|---|---|---|---|---|---|---|---|---|---|---|
| S23 | Pearson Correlation | .158 | .274 | .479** | .234 | .155 | .300* | .225 | .321* | .256 | .167 | .348* | .235 | .247 | .232 | .453** | .427** |
| | Sig. (2-tailed) | .300 | .068 | .001 | .121 | .308 | .046 | .137 | .031 | .089 | .273 | .019 | .120 | .101 | .125 | .002 | .003 |
| | N | 45 | 45 | 45 | 45 | 45 | 45 | 45 | 45 | 45 | 45 | 45 | 45 | 45 | 45 | 45 | 45 |
| S24 | Pearson Correlation | .476** | .504** | .623** | .161 | .277 | .491** | .449** | .442** | .386** | .585** | .451** | .405** | .393** | .515** | .416** | .525** |
| | Sig. (2-tailed) | .001 | .000 | .000 | .289 | .066 | .001 | .002 | .002 | .009 | .000 | .002 | .006 | .008 | .000 | .005 | .000 |
| | N | 45 | 45 | 45 | 45 | 45 | 45 | 45 | 45 | 45 | 45 | 45 | 45 | 45 | 45 | 45 | 45 |
| S25 | Pearson Correlation | .428** | .555** | .625** | .194 | .180 | .641** | .346* | .602** | .567** | .389** | .590** | .471** | .381** | .609** | .465** | .580** |
| | Sig. (2-tailed) | .003 | .000 | .000 | .202 | .236 | .000 | .020 | .000 | .000 | .008 | .000 | .001 | .010 | .000 | .001 | .000 |
| | N | 45 | 45 | 45 | 45 | 45 | 45 | 45 | 45 | 45 | 45 | 45 | 45 | 45 | 45 | 45 | 45 |
| S26 | Pearson Correlation | .539** | .557** | .516** | .004 | .286 | .340* | .513** | .336* | .412** | .381** | .397** | .318* | .488** | .356* | .418** | .403** |
| | Sig. (2-tailed) | .000 | .000 | .000 | .977 | .057 | .022 | .000 | .024 | .005 | .010 | .007 | .033 | .001 | .016 | .004 | .006 |
| | N | 45 | 45 | 45 | 45 | 45 | 45 | 45 | 45 | 45 | 45 | 45 | 45 | 45 | 45 | 45 | 45 |
| Totalseleksi | Pearson Correlation | .643** | .648** | .694** | .328* | .510** | .678** | .551** | .598** | .681** | .630** | .701** | .650** | .709** | .649** | .681** | .683** |
| | Sig. (2-tailed) | .000 | .000 | .000 | .028 | .000 | .000 | .000 | .000 | .000 | .000 | .000 | .000 | .000 | .000 | .000 | .000 |
| | N | 45 | 45 | 45 | 45 | 45 | 45 | 45 | 45 | 45 | 45 | 45 | 45 | 45 | 45 | 45 | 45 |

| S17 | S18 | S19 | S20 | S21 | S22 | S23 | S24 | S25 | S26 | Totalseleksi |
|---|---|---|---|---|---|---|---|---|---|---|
| .454** | .030 | .531** | .405** | .512** | .520** | .158 | .476** | .428** | .539** | .643** |
| .002 | .843 | .000 | .006 | .000 | .000 | .300 | .001 | .003 | .000 | .000 |
| 45 | 45 | 45 | 45 | 45 | 45 | 45 | 45 | 45 | 45 | 45 |
| .486** | .361* | .502** | .522** | .720** | .485** | .274 | .504** | .555** | .557** | .648** |

| | | | | | | | | | | |
|---|---|---|---|---|---|---|---|---|---|---|
| .001 | .015 | .000 | .000 | .000 | .001 | .068 | .000 | .000 | .000 | .000 |
| 45 | 45 | 45 | 45 | 45 | 45 | 45 | 45 | 45 | 45 | 45 |
| .415** | .556** | .310* | .377* | .137 | .147 | .479** | .623** | .625** | .516** | .694** |
| .005 | .000 | .038 | .011 | .371 | .336 | .001 | .000 | .000 | .000 | .000 |
| 45 | 45 | 45 | 45 | 45 | 45 | 45 | 45 | 45 | 45 | 45 |
| .163 | .102 | .152 | .356* | .101 | .285 | .234 | .161 | .194 | .004 | .328* |
| .284 | .504 | .320 | .016 | .509 | .058 | .121 | .289 | .202 | .977 | .028 |
| 45 | 45 | 45 | 45 | 45 | 45 | 45 | 45 | 45 | 45 | 45 |
| .344* | .191 | .435** | .369* | .474** | .465** | .155 | .277 | .180 | .286 | .510** |
| .021 | .208 | .003 | .013 | .001 | .001 | .308 | .066 | .236 | .057 | .000 |
| 45 | 45 | 45 | 45 | 45 | 45 | 45 | 45 | 45 | 45 | 45 |
| .492** | .430** | .281 | .587** | .220 | .229 | .300* | .491** | .641** | .340* | .678** |
| .001 | .003 | .061 | .000 | .146 | .130 | .046 | .001 | .000 | .022 | .000 |
| 45 | 45 | 45 | 45 | 45 | 45 | 45 | 45 | 45 | 45 | 45 |
| .260 | .198 | .546** | .355* | .190 | .306* | .225 | .449** | .346* | .513** | .551** |
| .085 | .191 | .000 | .017 | .210 | .041 | .137 | .002 | .020 | .000 | .000 |
| 45 | 45 | 45 | 45 | 45 | 45 | 45 | 45 | 45 | 45 | 45 |
| .412** | .243 | .137 | .538** | .064 | .195 | .321* | .442** | .602** | .336* | .598** |
| .005 | .108 | .369 | .000 | .676 | .198 | .031 | .002 | .000 | .024 | .000 |
| 45 | 45 | 45 | 45 | 45 | 45 | 45 | 45 | 45 | 45 | 45 |
| .401** | .210 | .498** | .585** | .331* | .442** | .256 | .386** | .567** | .412** | .681** |
| .006 | .166 | .001 | .000 | .026 | .002 | .089 | .009 | .000 | .005 | .000 |
| 45 | 45 | 45 | 45 | 45 | 45 | 45 | 45 | 45 | 45 | 45 |

| | | | | | | | | | | |
|---|---|---|---|---|---|---|---|---|---|---|
| .261 | .239 | .502** | .441** | .472** | .485** | .167 | .585** | .389** | .381** | .630** |
| .084 | .114 | .000 | .002 | .001 | .001 | .273 | .000 | .008 | .010 | .000 |
| 45 | 45 | 45 | 45 | 45 | 45 | 45 | 45 | 45 | 45 | 45 |
| .539** | .416** | .365* | .579** | .386** | .223 | .348* | .451** | .590** | .397** | .701** |
| .000 | .004 | .014 | .000 | .009 | .141 | .019 | .002 | .000 | .007 | .000 |
| 45 | 45 | 45 | 45 | 45 | 45 | 45 | 45 | 45 | 45 | 45 |
| .438** | .165 | .526** | .394** | .393** | .522** | .235 | .405** | .471** | .318* | .650** |
| .003 | .280 | .000 | .007 | .008 | .000 | .120 | .006 | .001 | .033 | .000 |
| 45 | 45 | 45 | 45 | 45 | 45 | 45 | 45 | 45 | 45 | 45 |
| .437** | .282 | .738** | .557** | .651** | .552** | .247 | .393** | .381** | .488** | .709** |
| .003 | .061 | .000 | .000 | .000 | .000 | .101 | .008 | .010 | .001 | .000 |
| 45 | 45 | 45 | 45 | 45 | 45 | 45 | 45 | 45 | 45 | 45 |
| .516** | .264 | .295* | .431** | .420** | .306* | .232 | .515** | .609** | .356* | .649** |
| .000 | .079 | .049 | .003 | .004 | .041 | .125 | .000 | .000 | .016 | .000 |
| 45 | 45 | 45 | 45 | 45 | 45 | 45 | 45 | 45 | 45 | 45 |
| .345* | .430** | .288 | .623** | .270 | .263 | .453** | .416** | .465** | .418** | .681** |
| .020 | .003 | .055 | .000 | .072 | .081 | .002 | .005 | .001 | .004 | .000 |
| 45 | 45 | 45 | 45 | 45 | 45 | 45 | 45 | 45 | 45 | 45 |
| .472** | .314* | .455** | .431** | .346* | .387** | .427** | .525** | .580** | .403** | .683** |
| .001 | .036 | .002 | .003 | .020 | .009 | .003 | .000 | .000 | .006 | .000 |
| 45 | 45 | 45 | 45 | 45 | 45 | 45 | 45 | 45 | 45 | 45 |
| 1 | .314* | .490** | .438** | .511** | .336* | .360* | .378* | .511** | .501** | .681** |
| | .036 | .001 | .003 | .000 | .024 | .015 | .011 | .000 | .000 | .000 |

| | | | | | | | | | | |
|---|---|---|---|---|---|---|---|---|---|---|
| 45 | 45 | 45 | 45 | 45 | 45 | 45 | 45 | 45 | 45 | 45 |
| .314* | 1 | .330* | .394** | .187 | .300* | .412** | .320* | .540** | .504** | .548** |
| .036 | | .027 | .007 | .219 | .045 | .005 | .032 | .000 | .000 | .000 |
| 45 | 45 | 45 | 45 | 45 | 45 | 45 | 45 | 45 | 45 | 45 |
| .490** | .330* | 1 | .526** | .428** | .599** | .242 | .273 | .428** | .539** | .656** |
| .001 | .027 | | .000 | .003 | .000 | .110 | .069 | .003 | .000 | .000 |
| 45 | 45 | 45 | 45 | 45 | 45 | 45 | 45 | 45 | 45 | 45 |
| .438** | .394** | .526** | 1 | .548** | .522** | .336* | .481** | .626** | .592** | .781** |
| .003 | .007 | .000 | | .000 | .000 | .024 | .001 | .000 | .000 | .000 |
| 45 | 45 | 45 | 45 | 45 | 45 | 45 | 45 | 45 | 45 | 45 |
| .511** | .187 | .428** | .548** | 1 | .472** | .144 | .433** | .364* | .558** | .593** |
| .000 | .219 | .003 | .000 | | .001 | .347 | .003 | .014 | .000 | .000 |
| 45 | 45 | 45 | 45 | 45 | 45 | 45 | 45 | 45 | 45 | 45 |
| .336* | .300* | .599** | .522** | .472** | 1 | .221 | .423** | .472** | .440** | .607** |
| .024 | .045 | .000 | .000 | .001 | | .145 | .004 | .001 | .003 | .000 |
| 45 | 45 | 45 | 45 | 45 | 45 | 45 | 45 | 45 | 45 | 45 |
| .360* | .412** | .242 | .336* | .144 | .221 | 1 | .332* | .454** | .341* | .530** |
| .015 | .005 | .110 | .024 | .347 | .145 | | .026 | .002 | .022 | .000 |
| 45 | 45 | 45 | 45 | 45 | 45 | 45 | 45 | 45 | 45 | 45 |
| .378* | .320* | .273 | .481** | .433** | .423** | .332* | 1 | .510** | .477** | .706** |
| .011 | .032 | .069 | .001 | .003 | .004 | .026 | | .000 | .001 | .000 |
| 45 | 45 | 45 | 45 | 45 | 45 | 45 | 45 | 45 | 45 | 45 |
| .511** | .540** | .428** | .626** | .364* | .472** | .454** | .510** | 1 | .502** | .798** |

| | | | | | | | | | | |
|---|---|---|---|---|---|---|---|---|---|---|
| .000 | .000 | .003 | .000 | .014 | .001 | .002 | .000 | | .000 | .000 |
| 45 | 45 | 45 | 45 | 45 | 45 | 45 | 45 | 45 | 45 | 45 |
| .501** | .504** | .539** | .592** | .558** | .440** | .341* | .477** | .502** | 1 | .710** |
| .000 | .000 | .000 | .000 | .000 | .003 | .022 | .001 | .000 | | .000 |
| 45 | 45 | 45 | 45 | 45 | 45 | 45 | 45 | 45 | 45 | 45 |
| .681** | .548** | .656** | .781** | .593** | .607** | .530** | .706** | .798** | .710** | 1 |
| .000 | .000 | .000 | .000 | .000 | .000 | .000 | .000 | .000 | .000 | |
| 45 | 45 | 45 | 45 | 45 | 45 | 45 | 45 | 45 | 45 | 45 |

Lampiran 3 Uji Validitas Butir Variabel Kepuasan Kerja

| | | K1 | K2 | K3 | K4 | K5 | K6 | K7 | K8 | K9 | K10 | K11 | K12 | K13 | K14 | K15 | K16 |
|---|---|---|---|---|---|---|---|---|---|---|---|---|---|---|---|---|---|
| K1 | Pearson Correlation | 1 | .372* | .387** | .390** | .454** | .487** | .440** | .563** | .440** | .274 | .473** | .428** | .251 | .382** | .540** | .421** |
| | Sig. (2-tailed) | | .012 | .009 | .008 | .002 | .001 | .002 | .000 | .002 | .068 | .001 | .003 | .096 | .010 | .000 | .004 |
| | N | 45 | 45 | 45 | 45 | 45 | 45 | 45 | 45 | 45 | 45 | 45 | 45 | 45 | 45 | 45 | 45 |
| K2 | Pearson Correlation | .372* | 1 | .349* | .477** | .622** | .656** | .477** | .291 | .477** | .276 | .478** | .406** | .295* | .171 | .438** | .567** |
| | Sig. (2-tailed) | .012 | | .019 | .001 | .000 | .000 | .001 | .053 | .001 | .066 | .001 | .006 | .049 | .263 | .003 | .000 |
| | N | 45 | 45 | 45 | 45 | 45 | 45 | 45 | 45 | 45 | 45 | 45 | 45 | 45 | 45 | 45 | 45 |
| K3 | Pearson Correlation | .387** | .349* | 1 | .382** | .234 | .499** | .568** | .305* | .455** | .354* | .506** | .496** | .519** | .494** | .295* | .233 |
| | Sig. (2-tailed) | .009 | .019 | | .010 | .121 | .000 | .000 | .042 | .002 | .017 | .000 | .001 | .000 | .001 | .049 | .123 |
| | N | 45 | 45 | 45 | 45 | 45 | 45 | 45 | 45 | 45 | 45 | 45 | 45 | 45 | 45 | 45 | 45 |
| K4 | Pearson Correlation | .390** | .477** | .382** | 1 | .431** | .440** | .416** | .278 | .416** | .178 | .388** | .329* | .230 | .114 | .445** | .388** |
| | Sig. (2-tailed) | .008 | .001 | .010 | | .003 | .002 | .004 | .064 | .004 | .243 | .009 | .027 | .128 | .454 | .002 | .008 |
| | N | 45 | 45 | 45 | 45 | 45 | 45 | 45 | 45 | 45 | 45 | 45 | 45 | 45 | 45 | 45 | 45 |
| K5 | Pearson Correlation | .454** | .622** | .234 | .431** | 1 | .512** | .355* | .555** | .499** | .284 | .438** | .325* | .088 | .283 | .477** | .531** |
| | Sig. (2-tailed) | .002 | .000 | .121 | .003 | | .000 | .017 | .000 | .000 | .059 | .003 | .029 | .567 | .059 | .001 | .000 |
| | N | 45 | 45 | 45 | 45 | 45 | 45 | 45 | 45 | 45 | 45 | 45 | 45 | 45 | 45 | 45 | 45 |
| K6 | Pearson Correlation | .487** | .656** | .499** | .440** | .512** | 1 | .644** | .348* | .311* | .425** | .497** | .365* | .253 | .154 | .419** | .455** |
| | Sig. (2-tailed) | .001 | .000 | .000 | .002 | .000 | | .000 | .019 | .038 | .004 | .001 | .014 | .093 | .312 | .004 | .002 |
| | N | 45 | 45 | 45 | 45 | 45 | 45 | 45 | 45 | 45 | 45 | 45 | 45 | 45 | 45 | 45 | 45 |
| K7 | Pearson Correlation | .440** | .477** | .568** | .416** | .355* | .644** | 1 | .427** | .477** | .347* | .346* | .285 | .319* | .323* | .351* | .382** |
| | Sig. (2-tailed) | .002 | .001 | .000 | .004 | .017 | .000 | | .003 | .001 | .020 | .020 | .058 | .033 | .030 | .018 | .010 |

| | | | | | | | | | | | | | | | | | |
|---|---|---|---|---|---|---|---|---|---|---|---|---|---|---|---|---|---|
| | N | 45 | 45 | 45 | 45 | 45 | 45 | 45 | 45 | 45 | 45 | 45 | 45 | 45 | 45 | 45 | 45 |
| K8 | Pearson Correlation | .563** | .291 | .305* | .278 | .555** | .348* | .427** | 1 | .570** | .476** | .372* | .397** | .252 | .533** | .477** | .334* |
| | Sig. (2-tailed) | .000 | .053 | .042 | .064 | .000 | .019 | .003 | | .000 | .001 | .012 | .007 | .095 | .000 | .001 | .025 |
| | N | 45 | 45 | 45 | 45 | 45 | 45 | 45 | 45 | 45 | 45 | 45 | 45 | 45 | 45 | 45 | 45 |
| K9 | Pearson Correlation | .440** | .477** | .455** | .416** | .499** | .311* | .477** | .570** | 1 | .347* | .613** | .577** | .385** | .576** | .351* | .223 |
| | Sig. (2-tailed) | .002 | .001 | .002 | .004 | .000 | .038 | .001 | .000 | | .020 | .000 | .000 | .009 | .000 | .018 | .142 |
| | N | 45 | 45 | 45 | 45 | 45 | 45 | 45 | 45 | 45 | 45 | 45 | 45 | 45 | 45 | 45 | 45 |
| K10 | Pearson Correlation | .274 | .276 | .354* | .178 | .284 | .425** | .347* | .476** | .347* | 1 | .499** | .462** | .402** | .423** | .386** | .340* |
| | Sig. (2-tailed) | .068 | .066 | .017 | .243 | .059 | .004 | .020 | .001 | .020 | | .000 | .001 | .006 | .004 | .009 | .022 |
| | N | 45 | 45 | 45 | 45 | 45 | 45 | 45 | 45 | 45 | 45 | 45 | 45 | 45 | 45 | 45 | 45 |
| K11 | Pearson Correlation | .473** | .478** | .506** | .388** | .438** | .497** | .346* | .372* | .613** | .499** | 1 | .821** | .582** | .570** | .519** | .380** |
| | Sig. (2-tailed) | .001 | .001 | .000 | .009 | .003 | .001 | .020 | .012 | .000 | .000 | | .000 | .000 | .000 | .000 | .010 |
| | N | 45 | 45 | 45 | 45 | 45 | 45 | 45 | 45 | 45 | 45 | 45 | 45 | 45 | 45 | 45 | 45 |
| K12 | Pearson Correlation | .428** | .406** | .496** | .329* | .325* | .365* | .285 | .397** | .577** | .462** | .821** | 1 | .610** | .562** | .363* | .304* |
| | Sig. (2-tailed) | .003 | .006 | .001 | .027 | .029 | .014 | .058 | .007 | .000 | .001 | .000 | | .000 | .000 | .014 | .042 |
| | N | 45 | 45 | 45 | 45 | 45 | 45 | 45 | 45 | 45 | 45 | 45 | 45 | 45 | 45 | 45 | 45 |
| K13 | Pearson Correlation | .251 | .295* | .519** | .230 | .088 | .253 | .319* | .252 | .385** | .402** | .582** | .610** | 1 | .380** | .445** | .290 |
| | Sig. (2-tailed) | .096 | .049 | .000 | .128 | .567 | .093 | .033 | .095 | .009 | .006 | .000 | .000 | | .010 | .002 | .053 |
| | N | 45 | 45 | 45 | 45 | 45 | 45 | 45 | 45 | 45 | 45 | 45 | 45 | 45 | 45 | 45 | 45 |
| K14 | Pearson Correlation | .382** | .171 | .494** | .114 | .283 | .154 | .323* | .533** | .576** | .423** | .570** | .562** | .380** | 1 | .491** | .387** |
| | Sig. (2-tailed) | .010 | .263 | .001 | .454 | .059 | .312 | .030 | .000 | .000 | .004 | .000 | .000 | .010 | | .001 | .009 |
| | N | 45 | 45 | 45 | 45 | 45 | 45 | 45 | 45 | 45 | 45 | 45 | 45 | 45 | 45 | 45 | 45 |
| K15 | Pearson Correlation | .540** | .438** | .295* | .445** | .477** | .419** | .351* | .477** | .351* | .386** | .519** | .363* | .445** | .491** | 1 | .833** |

| | | | | | | | | | | | | | | | | | |
|---|---|---|---|---|---|---|---|---|---|---|---|---|---|---|---|---|---|
| | Sig. (2-tailed) | .000 | .003 | .049 | .002 | .001 | .004 | .018 | .001 | .018 | .009 | .000 | .014 | .002 | .001 | | .000 |
| | N | 45 | 45 | 45 | 45 | 45 | 45 | 45 | 45 | 45 | 45 | 45 | 45 | 45 | 45 | 45 | 45 |
| K16 | Pearson Correlation | .421** | .567** | .233 | .388** | .531** | .455** | .382** | .334* | .223 | .340* | .380** | .304* | .290 | .387** | .833** | 1 |
| | Sig. (2-tailed) | .004 | .000 | .123 | .008 | .000 | .002 | .010 | .025 | .142 | .022 | .010 | .042 | .053 | .009 | .000 | |
| | N | 45 | 45 | 45 | 45 | 45 | 45 | 45 | 45 | 45 | 45 | 45 | 45 | 45 | 45 | 45 | 45 |
| K17 | Pearson Correlation | .475** | .317* | .184 | .413** | .372* | .072 | .038 | .372* | .476** | .201 | .369* | .353* | .315* | .229 | .515** | .291 |
| | Sig. (2-tailed) | .001 | .034 | .227 | .005 | .012 | .639 | .806 | .012 | .001 | .186 | .013 | .017 | .035 | .131 | .000 | .052 |
| | N | 45 | 45 | 45 | 45 | 45 | 45 | 45 | 45 | 45 | 45 | 45 | 45 | 45 | 45 | 45 | 45 |
| K18 | Pearson Correlation | .522** | .317* | .306* | .413** | .372* | .215 | .163 | .527** | .664** | .285 | .542** | .543** | .458** | .392** | .426** | .291 |
| | Sig. (2-tailed) | .000 | .034 | .041 | .005 | .012 | .155 | .285 | .000 | .000 | .058 | .000 | .000 | .002 | .008 | .004 | .052 |
| | N | 45 | 45 | 45 | 45 | 45 | 45 | 45 | 45 | 45 | 45 | 45 | 45 | 45 | 45 | 45 | 45 |
| K19 | Pearson Correlation | .370* | .571** | .608** | .550** | .393** | .449** | .422** | .311* | .555** | .198 | .606** | .506** | .431** | .366* | .524** | .455** |
| | Sig. (2-tailed) | .012 | .000 | .000 | .000 | .007 | .002 | .004 | .037 | .000 | .193 | .000 | .000 | .003 | .013 | .000 | .002 |
| | N | 45 | 45 | 45 | 45 | 45 | 45 | 45 | 45 | 45 | 45 | 45 | 45 | 45 | 45 | 45 | 45 |
| K20 | Pearson Correlation | .548** | .540** | .162 | .674** | .401** | .434** | .289 | .324* | .414** | .230 | .406** | .340* | .094 | .090 | .390** | .424** |
| | Sig. (2-tailed) | .000 | .000 | .289 | .000 | .006 | .003 | .054 | .030 | .005 | .128 | .006 | .022 | .537 | .557 | .008 | .004 |
| | N | 45 | 45 | 45 | 45 | 45 | 45 | 45 | 45 | 45 | 45 | 45 | 45 | 45 | 45 | 45 | 45 |
| K21 | Pearson Correlation | .634** | .420** | .315* | .525** | .372* | .467** | .451** | .452** | .516** | .201 | .553** | .541** | .368* | .224 | .487** | .352* |
| | Sig. (2-tailed) | .000 | .004 | .035 | .000 | .012 | .001 | .002 | .002 | .000 | .186 | .000 | .000 | .013 | .139 | .001 | .018 |
| | N | 45 | 45 | 45 | 45 | 45 | 45 | 45 | 45 | 45 | 45 | 45 | 45 | 45 | 45 | 45 | 45 |
| K22 | Pearson Correlation | .510** | .341* | .264 | .659** | .317* | .386** | .310* | .400** | .445** | .306* | .521** | .448** | .339* | .129 | .458** | .313* |
| | Sig. (2-tailed) | .000 | .022 | .080 | .000 | .034 | .009 | .038 | .006 | .002 | .041 | .000 | .002 | .023 | .399 | .002 | .036 |
| | N | 45 | 45 | 45 | 45 | 45 | 45 | 45 | 45 | 45 | 45 | 45 | 45 | 45 | 45 | 45 | 45 |

| | | | | | | | | | | | | | | | | | |
|---|---|---|---|---|---|---|---|---|---|---|---|---|---|---|---|---|---|
| Total Kepuasan | Pearson Correlation | .721** | .663** | .622** | .646** | .625** | .642** | .606** | .652** | .747** | .530** | .792** | .725** | .568** | .578** | .711** | .608** |
| | Sig. (2-tailed) | .000 | .000 | .000 | .000 | .000 | .000 | .000 | .000 | .000 | .000 | .000 | .000 | .000 | .000 | .000 | .000 |
| | N | 45 | 45 | 45 | 45 | 45 | 45 | 45 | 45 | 45 | 45 | 45 | 45 | 45 | 45 | 45 | 45 |

| K17 | K18 | K19 | K20 | K21 | K22 | TotalKepuasan |
|---|---|---|---|---|---|---|
| .475** | .522** | .370* | .548** | .634** | .510** | .721** |
| .001 | .000 | .012 | .000 | .000 | .000 | .000 |
| 45 | 45 | 45 | 45 | 45 | 45 | 45 |
| .317* | .317* | .571** | .540** | .420** | .341* | .663** |
| .034 | .034 | .000 | .000 | .004 | .022 | .000 |
| 45 | 45 | 45 | 45 | 45 | 45 | 45 |
| .184 | .306* | .608** | .162 | .315* | .264 | .622** |
| .227 | .041 | .000 | .289 | .035 | .080 | .000 |
| 45 | 45 | 45 | 45 | 45 | 45 | 45 |
| .413** | .413** | .550** | .674** | .525** | .659** | .646** |
| .005 | .005 | .000 | .000 | .000 | .000 | .000 |
| 45 | 45 | 45 | 45 | 45 | 45 | 45 |
| .372* | .372* | .393** | .401** | .372* | .317* | .625** |
| .012 | .012 | .007 | .006 | .012 | .034 | .000 |
| 45 | 45 | 45 | 45 | 45 | 45 | 45 |
| .072 | .215 | .449** | .434** | .467** | .386** | .642** |
| .639 | .155 | .002 | .003 | .001 | .009 | .000 |
| 45 | 45 | 45 | 45 | 45 | 45 | 45 |

| | | | | | | |
|---|---|---|---|---|---|---|
| .038 | .163 | .422** | .289 | .451** | .310* | .606** |
| .806 | .285 | .004 | .054 | .002 | .038 | .000 |
| 45 | 45 | 45 | 45 | 45 | 45 | 45 |
| .372* | .527** | .311* | .324* | .452** | .400** | .652** |
| .012 | .000 | .037 | .030 | .002 | .006 | .000 |
| 45 | 45 | 45 | 45 | 45 | 45 | 45 |
| .476** | .664** | .555** | .414** | .516** | .445** | .747** |
| .001 | .000 | .000 | .005 | .000 | .002 | .000 |
| 45 | 45 | 45 | 45 | 45 | 45 | 45 |
| .201 | .285 | .198 | .230 | .201 | .306* | .530** |
| .186 | .058 | .193 | .128 | .186 | .041 | .000 |
| 45 | 45 | 45 | 45 | 45 | 45 | 45 |
| .369* | .542** | .606** | .406** | .553** | .521** | .792** |
| .013 | .000 | .000 | .006 | .000 | .000 | .000 |
| 45 | 45 | 45 | 45 | 45 | 45 | 45 |
| .353* | .543** | .506** | .340* | .541** | .448** | .725** |
| .017 | .000 | .000 | .022 | .000 | .002 | .000 |
| 45 | 45 | 45 | 45 | 45 | 45 | 45 |
| .315* | .458** | .431** | .094 | .368* | .339* | .568** |
| .035 | .002 | .003 | .537 | .013 | .023 | .000 |
| 45 | 45 | 45 | 45 | 45 | 45 | 45 |
| .229 | .392** | .366* | .090 | .224 | .129 | .578** |
| .131 | .008 | .013 | .557 | .139 | .399 | .000 |

| | | | | | | |
|---|---|---|---|---|---|---|
| 45 | 45 | 45 | 45 | 45 | 45 | 45 |
| .515** | .426** | .524** | .390** | .487** | .458** | .711** |
| .000 | .004 | .000 | .008 | .001 | .002 | .000 |
| 45 | 45 | 45 | 45 | 45 | 45 | 45 |
| .291 | .291 | .455** | .424** | .352* | .313* | .608** |
| .052 | .052 | .002 | .004 | .018 | .036 | .000 |
| 45 | 45 | 45 | 45 | 45 | 45 | 45 |
| 1 | .662** | .503** | .535** | .556** | .639** | .604** |
| | .000 | .000 | .000 | .000 | .000 | .000 |
| 45 | 45 | 45 | 45 | 45 | 45 | 45 |
| .662** | 1 | .574** | .602** | .556** | .639** | .719** |
| .000 | | .000 | .000 | .000 | .000 | .000 |
| 45 | 45 | 45 | 45 | 45 | 45 | 45 |
| .503** | .574** | 1 | .489** | .566** | .540** | .749** |
| .000 | .000 | | .001 | .000 | .000 | .000 |
| 45 | 45 | 45 | 45 | 45 | 45 | 45 |
| .535** | .602** | .489** | 1 | .573** | .719** | .658** |
| .000 | .000 | .001 | | .000 | .000 | .000 |
| 45 | 45 | 45 | 45 | 45 | 45 | 45 |
| .556** | .556** | .566** | .573** | 1 | .747** | .746** |
| .000 | .000 | .000 | .000 | | .000 | .000 |
| 45 | 45 | 45 | 45 | 45 | 45 | 45 |
| .639** | .639** | .540** | .719** | .747** | 1 | .709** |

| | | | | | | |
|---|---|---|---|---|---|---|
| .000 | .000 | .000 | .000 | .000 | | .000 |
| 45 | 45 | 45 | 45 | 45 | 45 | 45 |
| .604** | .719** | .749** | .658** | .746** | .709** | 1 |
| .000 | .000 | .000 | .000 | .000 | .000 | |
| 45 | 45 | 45 | 45 | 45 | 45 | 45 |

UNIVERSITAS PENDIDIKAN GANESHA
UNDIKSHA

Lampiran 4 Pengujian Validitas Instrumen Kepemimpinan Transformasional

| | | T1 | T2 | T3 | T4 | T5 | T6 | T7 | T8 | T9 | T10 | T11 | T12 | T13 | T14 | T15 |
|---|---|---|---|---|---|---|---|---|---|---|---|---|---|---|---|---|
| T1 | Pearson Correlation | 1 | .316* | .532** | .300* | .478** | .453** | .597** | .423** | .502** | .541** | .334* | .592** | .418** | .437** | .490** |
| | Sig. (2-tailed) | | .034 | .000 | .045 | .001 | .002 | .000 | .004 | .000 | .000 | .025 | .000 | .004 | .003 | .001 |
| | N | 45 | 45 | 45 | 45 | 45 | 45 | 45 | 45 | 45 | 45 | 45 | 45 | 45 | 45 | 45 |
| T2 | Pearson Correlation | .316* | 1 | .487** | .597** | .455** | .552** | .561** | .519** | .694** | .495** | .439** | .513** | .514** | .528** | .509** |
| | Sig. (2-tailed) | .034 | | .001 | .000 | .002 | .000 | .000 | .000 | .000 | .001 | .003 | .000 | .000 | .000 | .000 |
| | N | 45 | 45 | 45 | 45 | 45 | 45 | 45 | 45 | 45 | 45 | 45 | 45 | 45 | 45 | 45 |
| T3 | Pearson Correlation | .532** | .487** | 1 | .505** | .519** | .599** | .505** | .527** | .585** | .560** | .515** | .419** | .406** | .399** | .575** |
| | Sig. (2-tailed) | .000 | .001 | | .000 | .000 | .000 | .000 | .000 | .000 | .000 | .000 | .004 | .006 | .007 | .000 |
| | N | 45 | 45 | 45 | 45 | 45 | 45 | 45 | 45 | 45 | 45 | 45 | 45 | 45 | 45 | 45 |
| T4 | Pearson Correlation | .300* | .597** | .505** | 1 | .644** | .581** | .383** | .590** | .713** | .405** | .631** | .374* | .424** | .502** | .540** |
| | Sig. (2-tailed) | .045 | .000 | .000 | | .000 | .000 | .010 | .000 | .000 | .006 | .000 | .011 | .004 | .000 | .000 |
| | N | 45 | 45 | 45 | 45 | 45 | 45 | 45 | 45 | 45 | 45 | 45 | 45 | 45 | 45 | 45 |
| T5 | Pearson Correlation | .478** | .455** | .519** | .644** | 1 | .613** | .458** | .461** | .568** | .528** | .541** | .640** | .412** | .576** | .539** |
| | Sig. (2-tailed) | .001 | .002 | .000 | .000 | | .000 | .002 | .001 | .000 | .000 | .000 | .000 | .005 | .000 | .000 |
| | N | 45 | 45 | 45 | 45 | 45 | 45 | 45 | 45 | 45 | 45 | 45 | 45 | 45 | 45 | 45 |
| T6 | Pearson Correlation | .453** | .552** | .599** | .581** | .613** | 1 | .501** | .504** | .669** | .527** | .583** | .564** | .564** | .622** | .693** |
| | Sig. (2-tailed) | .002 | .000 | .000 | .000 | .000 | | .000 | .000 | .000 | .000 | .000 | .000 | .000 | .000 | .000 |
| | N | 45 | 45 | 45 | 45 | 45 | 45 | 45 | 45 | 45 | 45 | 45 | 45 | 45 | 45 | 45 |
| T7 | Pearson Correlation | .597** | .561** | .505** | .383** | .458** | .501** | 1 | .616** | .614** | .514** | .426** | .592** | .342* | .513** | .522** |
| | Sig. (2-tailed) | .000 | .000 | .000 | .010 | .002 | .000 | | .000 | .000 | .000 | .004 | .000 | .021 | .000 | .000 |

| | | | | | | | | | | | | | | | | |
|---|---|---|---|---|---|---|---|---|---|---|---|---|---|---|---|---|
| | N | 45 | 45 | 45 | 45 | 45 | 45 | 45 | 45 | 45 | 45 | 45 | 45 | 45 | 45 | 45 |
| T8 | Pearson Correlation | .423** | .519** | .527** | .590** | .461** | .504** | .616** | 1 | .740** | .389** | .710** | .580** | .406** | .527** | .682** |
| | Sig. (2-tailed) | .004 | .000 | .000 | .000 | .001 | .000 | .000 | | .000 | .008 | .000 | .000 | .006 | .000 | .000 |
| | N | 45 | 45 | 45 | 45 | 45 | 45 | 45 | 45 | 45 | 45 | 45 | 45 | 45 | 45 | 45 |
| T9 | Pearson Correlation | .502** | .694** | .585** | .713** | .568** | .669** | .614** | .740** | 1 | .542** | .675** | .566** | .492** | .656** | .693** |
| | Sig. (2-tailed) | .000 | .000 | .000 | .000 | .000 | .000 | .000 | .000 | | .000 | .000 | .000 | .001 | .000 | .000 |
| | N | 45 | 45 | 45 | 45 | 45 | 45 | 45 | 45 | 45 | 45 | 45 | 45 | 45 | 45 | 45 |
| T10 | Pearson Correlation | .541** | .495** | .560** | .405** | .528** | .527** | .514** | .389** | .542** | 1 | .451** | .579** | .346* | .403** | .464** |
| | Sig. (2-tailed) | .000 | .001 | .000 | .006 | .000 | .000 | .000 | .008 | .000 | | .002 | .000 | .020 | .006 | .001 |
| | N | 45 | 45 | 45 | 45 | 45 | 45 | 45 | 45 | 45 | 45 | 45 | 45 | 45 | 45 | 45 |
| T11 | Pearson Correlation | .334* | .439** | .515** | .631** | .541** | .583** | .426** | .710** | .675** | .451** | 1 | .479** | .400** | .621** | .726** |
| | Sig. (2-tailed) | .025 | .003 | .000 | .000 | .000 | .000 | .004 | .000 | .000 | .002 | | .001 | .006 | .000 | .000 |
| | N | 45 | 45 | 45 | 45 | 45 | 45 | 45 | 45 | 45 | 45 | 45 | 45 | 45 | 45 | 45 |
| T12 | Pearson Correlation | .592** | .513** | .419** | .374* | .640** | .564** | .592** | .580** | .566** | .579** | .479** | 1 | .461** | .578** | .654** |
| | Sig. (2-tailed) | .000 | .000 | .004 | .011 | .000 | .000 | .000 | .000 | .000 | .000 | .001 | | .001 | .000 | .000 |
| | N | 45 | 45 | 45 | 45 | 45 | 45 | 45 | 45 | 45 | 45 | 45 | 45 | 45 | 45 | 45 |
| T13 | Pearson Correlation | .418** | .514** | .406** | .424** | .412** | .564** | .342* | .406** | .492** | .346* | .400** | .461** | 1 | .503** | .341* |
| | Sig. (2-tailed) | .004 | .000 | .006 | .004 | .005 | .000 | .021 | .006 | .001 | .020 | .006 | .001 | | .000 | .022 |
| | N | 45 | 45 | 45 | 45 | 45 | 45 | 45 | 45 | 45 | 45 | 45 | 45 | 45 | 45 | 45 |
| T14 | Pearson Correlation | .437** | .528** | .399** | .502** | .576** | .622** | .513** | .527** | .656** | .403** | .621** | .578** | .503** | 1 | .773** |
| | Sig. (2-tailed) | .003 | .000 | .007 | .000 | .000 | .000 | .000 | .000 | .000 | .006 | .000 | .000 | .000 | | .000 |
| | N | 45 | 45 | 45 | 45 | 45 | 45 | 45 | 45 | 45 | 45 | 45 | 45 | 45 | 45 | 45 |
| T15 | Pearson Correlation | .490** | .509** | .575** | .540** | .539** | .693** | .522** | .682** | .693** | .464** | .726** | .654** | .341* | .773** | 1 |

| | | | | | | | | | | | | | | | | |
|---|---|---|---|---|---|---|---|---|---|---|---|---|---|---|---|---|
| | Sig. (2-tailed) | .001 | .000 | .000 | .000 | .000 | .000 | .000 | .000 | .000 | .001 | .000 | .000 | .022 | .000 | |
| | N | 45 | 45 | 45 | 45 | 45 | 45 | 45 | 45 | 45 | 45 | 45 | 45 | 45 | 45 | 45 |
| T16 | Pearson Correlation | .329* | .593** | .533** | .511** | .543** | .530** | .444** | .384** | .590** | .688** | .509** | .438** | .433** | .543** | .427** |
| | Sig. (2-tailed) | .027 | .000 | .000 | .000 | .000 | .000 | .002 | .009 | .000 | .000 | .000 | .003 | .003 | .000 | .003 |
| | N | 45 | 45 | 45 | 45 | 45 | 45 | 45 | 45 | 45 | 45 | 45 | 45 | 45 | 45 | 45 |
| T17 | Pearson Correlation | .597** | .614** | .505** | .433** | .624** | .561** | .737** | .566** | .614** | .583** | .482** | .770** | .544** | .573** | .581** |
| | Sig. (2-tailed) | .000 | .000 | .000 | .003 | .000 | .000 | .000 | .000 | .000 | .000 | .001 | .000 | .000 | .000 | .000 |
| | N | 45 | 45 | 45 | 45 | 45 | 45 | 45 | 45 | 45 | 45 | 45 | 45 | 45 | 45 | 45 |
| T18 | Pearson Correlation | .257 | .444** | .590** | .514** | .410** | .479** | .292 | .576** | .556** | .279 | .623** | .382** | .352* | .501** | .559** |
| | Sig. (2-tailed) | .089 | .002 | .000 | .000 | .005 | .001 | .052 | .000 | .000 | .063 | .000 | .010 | .018 | .000 | .000 |
| | N | 45 | 45 | 45 | 45 | 45 | 45 | 45 | 45 | 45 | 45 | 45 | 45 | 45 | 45 | 45 |
| T19 | Pearson Correlation | .454** | .561** | .549** | .433** | .569** | .501** | .578** | .363* | .503** | .377* | .482** | .414** | .410** | .513** | .522** |
| | Sig. (2-tailed) | .002 | .000 | .000 | .003 | .000 | .000 | .000 | .014 | .000 | .011 | .001 | .005 | .005 | .000 | .000 |
| | N | 45 | 45 | 45 | 45 | 45 | 45 | 45 | 45 | 45 | 45 | 45 | 45 | 45 | 45 | 45 |
| T20 | Pearson Correlation | .509** | .307* | .503** | .460** | .447** | .386** | .429** | .547** | .479** | .562** | .512** | .416** | .364* | .546** | .574** |
| | Sig. (2-tailed) | .000 | .040 | .000 | .001 | .002 | .009 | .003 | .000 | .001 | .000 | .000 | .004 | .014 | .000 | .000 |
| | N | 45 | 45 | 45 | 45 | 45 | 45 | 45 | 45 | 45 | 45 | 45 | 45 | 45 | 45 | 45 |
| T21 | Pearson Correlation | .232 | .597** | .463** | .375* | .433** | .410** | .483** | .590** | .553** | .275 | .471** | .431** | .360* | .559** | .484** |
| | Sig. (2-tailed) | .125 | .000 | .001 | .011 | .003 | .005 | .001 | .000 | .000 | .068 | .001 | .003 | .015 | .000 | .001 |
| | N | 45 | 45 | 45 | 45 | 45 | 45 | 45 | 45 | 45 | 45 | 45 | 45 | 45 | 45 | 45 |
| T22 | Pearson Correlation | .382** | .536** | .535** | .560** | .562** | .640** | .486** | .537** | .648** | .500** | .567** | .312* | .324* | .545** | .452** |
| | Sig. (2-tailed) | .010 | .000 | .000 | .000 | .000 | .000 | .001 | .000 | .000 | .000 | .000 | .037 | .030 | .000 | .002 |
| | N | 45 | 45 | 45 | 45 | 45 | 45 | 45 | 45 | 45 | 45 | 45 | 45 | 45 | 45 | 45 |

| | | | | | | | | | | | | | | | | |
|---|---|---|---|---|---|---|---|---|---|---|---|---|---|---|---|---|
| T23 | Pearson Correlation | .272 | .495** | .301* | .517** | .643** | .536** | .298* | .491** | .451** | .371* | .575** | .553** | .450** | .503** | .489** |
| | Sig. (2-tailed) | .070 | .001 | .045 | .000 | .000 | .000 | .046 | .001 | .002 | .012 | .000 | .000 | .002 | .000 | .001 |
| | N | 45 | 45 | 45 | 45 | 45 | 45 | 45 | 45 | 45 | 45 | 45 | 45 | 45 | 45 | 45 |
| T24 | Pearson Correlation | .615** | .620** | .425** | .589** | .604** | .578** | .535** | .673** | .688** | .500** | .656** | .602** | .448** | .497** | .672** |
| | Sig. (2-tailed) | .000 | .000 | .004 | .000 | .000 | .000 | .000 | .000 | .000 | .000 | .000 | .000 | .002 | .001 | .000 |
| | N | 45 | 45 | 45 | 45 | 45 | 45 | 45 | 45 | 45 | 45 | 45 | 45 | 45 | 45 | 45 |
| T25 | Pearson Correlation | .570** | .653** | .538** | .564** | .544** | .669** | .623** | .599** | .777** | .554** | .628** | .702** | .586** | .736** | .748** |
| | Sig. (2-tailed) | .000 | .000 | .000 | .000 | .000 | .000 | .000 | .000 | .000 | .000 | .000 | .000 | .000 | .000 | .000 |
| | N | 45 | 45 | 45 | 45 | 45 | 45 | 45 | 45 | 45 | 45 | 45 | 45 | 45 | 45 | 45 |
| T26 | Pearson Correlation | .244 | .521** | .221 | .445** | .511** | .372* | .508** | .569** | .526** | .289 | .383** | .393** | .108 | .348* | .450** |
| | Sig. (2-tailed) | .106 | .000 | .144 | .002 | .000 | .012 | .000 | .000 | .000 | .054 | .009 | .008 | .480 | .019 | .002 |
| | N | 45 | 45 | 45 | 45 | 45 | 45 | 45 | 45 | 45 | 45 | 45 | 45 | 45 | 45 | 45 |
| T27 | Pearson Correlation | .058 | .193 | .045 | .314* | .270 | .248 | .323* | .481** | .310* | .235 | .568** | .286 | .014 | .295* | .403** |
| | Sig. (2-tailed) | .706 | .205 | .771 | .036 | .073 | .100 | .031 | .001 | .038 | .120 | .000 | .057 | .929 | .050 | .006 |
| | N | 45 | 45 | 45 | 45 | 45 | 45 | 45 | 45 | 45 | 45 | 45 | 45 | 45 | 45 | 45 |
| T28 | Pearson Correlation | .262 | .521** | .264 | .495** | .537** | .429** | .555** | .523** | .573** | .320* | .498** | .344* | .284 | .418** | .435** |
| | Sig. (2-tailed) | .083 | .000 | .080 | .001 | .000 | .003 | .000 | .000 | .000 | .032 | .000 | .021 | .058 | .004 | .003 |
| | N | 45 | 45 | 45 | 45 | 45 | 45 | 45 | 45 | 45 | 45 | 45 | 45 | 45 | 45 | 45 |
| T29 | Pearson Correlation | .588** | .484** | .503** | .404** | .632** | .519** | .487** | .491** | .604** | .562** | .512** | .549** | .514** | .612** | .508** |
| | Sig. (2-tailed) | .000 | .001 | .000 | .006 | .000 | .000 | .001 | .001 | .000 | .000 | .000 | .000 | .000 | .000 | .000 |
| | N | 45 | 45 | 45 | 45 | 45 | 45 | 45 | 45 | 45 | 45 | 45 | 45 | 45 | 45 | 45 |
| T30 | Pearson Correlation | .369* | .638** | .579** | .438** | .540** | .612** | .453** | .413** | .577** | .507** | .550** | .510** | .687** | .453** | .412** |
| | Sig. (2-tailed) | .013 | .000 | .000 | .003 | .000 | .000 | .002 | .005 | .000 | .000 | .000 | .000 | .000 | .002 | .005 |

| | | | | | | | | | | | | | | | | |
|---|---|---|---|---|---|---|---|---|---|---|---|---|---|---|---|---|
| | N | 45 | 45 | 45 | 45 | 45 | 45 | 45 | 45 | 45 | 45 | 45 | 45 | 45 | 45 | 45 |
| T31 | Pearson Correlation | .425** | .634** | .512** | .643** | .623** | .524** | .598** | .736** | .702** | .322* | .671** | .579** | .382** | .667** | .674** |
| | Sig. (2-tailed) | .004 | .000 | .000 | .000 | .000 | .000 | .000 | .000 | .000 | .031 | .000 | .000 | .010 | .000 | .000 |
| | N | 45 | 45 | 45 | 45 | 45 | 45 | 45 | 45 | 45 | 45 | 45 | 45 | 45 | 45 | 45 |
| T32 | Pearson Correlation | .394** | .634** | .351* | .388** | .514** | .434** | .687** | .573** | .526** | .579** | .491** | .582** | .381** | .587** | .571** |
| | Sig. (2-tailed) | .007 | .000 | .018 | .008 | .000 | .003 | .000 | .000 | .000 | .000 | .001 | .000 | .010 | .000 | .000 |
| | N | 45 | 45 | 45 | 45 | 45 | 45 | 45 | 45 | 45 | 45 | 45 | 45 | 45 | 45 | 45 |
| T33 | Pearson Correlation | .204 | .394** | .275 | .416** | .279 | .395** | .315* | .428** | .404** | .390** | .417** | .354* | .340* | .395** | .406** |
| | Sig. (2-tailed) | .180 | .007 | .067 | .004 | .063 | .007 | .035 | .003 | .006 | .008 | .004 | .017 | .022 | .007 | .006 |
| | N | 45 | 45 | 45 | 45 | 45 | 45 | 45 | 45 | 45 | 45 | 45 | 45 | 45 | 45 | 45 |
| T34 | Pearson Correlation | .198 | .461** | .328* | .064 | .106 | .431** | .358* | .151 | .213 | .349* | .190 | .151 | .386** | .393** | .213 |
| | Sig. (2-tailed) | .193 | .001 | .028 | .675 | .489 | .003 | .016 | .323 | .160 | .019 | .210 | .321 | .009 | .008 | .161 |
| | N | 45 | 45 | 45 | 45 | 45 | 45 | 45 | 45 | 45 | 45 | 45 | 45 | 45 | 45 | 45 |
| T35 | Pearson Correlation | .144 | .581** | .294 | .296* | .342* | .488** | .410** | .277 | .492** | .258 | .257 | .234 | .313* | .274 | .266 |
| | Sig. (2-tailed) | .345 | .000 | .050 | .049 | .022 | .001 | .005 | .065 | .001 | .087 | .088 | .122 | .036 | .068 | .078 |
| | N | 45 | 45 | 45 | 45 | 45 | 45 | 45 | 45 | 45 | 45 | 45 | 45 | 45 | 45 | 45 |
| Totalkepemimpinan | Pearson Correlation | .580** | .761** | .673** | .700** | .739** | .760** | .720** | .764** | .834** | .651** | .758** | .710** | .592** | .754** | .774** |
| | Sig. (2-tailed) | .000 | .000 | .000 | .000 | .000 | .000 | .000 | .000 | .000 | .000 | .000 | .000 | .000 | .000 | .000 |
| | N | 45 | 45 | 45 | 45 | 45 | 45 | 45 | 45 | 45 | 45 | 45 | 45 | 45 | 45 | 45 |

| T16 | T17 | T18 | T19 | T20 | T21 | T22 | T23 | T24 | T25 | T26 | T27 | T28 | T29 | T30 | T31 | T32 | T33 | T34 | T35 | Total kep. Transform |
|---|---|---|---|---|---|---|---|---|---|---|---|---|---|---|---|---|---|---|---|---|
| .329* | .597** | .257 | .454** | .509** | .232 | .382** | .272 | .615** | .570** | .244 | .058 | .262 | .588** | .369* | .425** | .394** | .204 | .198 | .144 | .580** |
| .027 | .000 | .089 | .002 | .000 | .125 | .010 | .070 | .000 | .000 | .106 | .706 | .083 | .000 | .013 | .004 | .007 | .180 | .193 | .345 | .000 |
| 45 | 45 | 45 | 45 | 45 | 45 | 45 | 45 | 45 | 45 | 45 | 45 | 45 | 45 | 45 | 45 | 45 | 45 | 45 | 45 | 45 |
| .593** | .614** | .444** | .561** | .307* | .597** | .536** | .495** | .620** | .653** | .521** | .193 | .521** | .484** | .638** | .634** | .634** | .394** | .461** | .581** | .761** |
| .000 | .000 | .002 | .000 | .040 | .000 | .000 | .001 | .000 | .000 | .000 | .205 | .000 | .001 | .000 | .000 | .000 | .007 | .001 | .000 | .000 |
| 45 | 45 | 45 | 45 | 45 | 45 | 45 | 45 | 45 | 45 | 45 | 45 | 45 | 45 | 45 | 45 | 45 | 45 | 45 | 45 | 45 |
| .533** | .505** | .590** | .549** | .503** | .463** | .535** | .301* | .425** | .538** | .221 | .045 | .264 | .503** | .579** | .512** | .351* | .275 | .328* | .294 | .673** |
| .000 | .000 | .000 | .000 | .000 | .001 | .000 | .045 | .004 | .000 | .144 | .771 | .080 | .000 | .000 | .000 | .018 | .067 | .028 | .050 | .000 |
| 45 | 45 | 45 | 45 | 45 | 45 | 45 | 45 | 45 | 45 | 45 | 45 | 45 | 45 | 45 | 45 | 45 | 45 | 45 | 45 | 45 |
| .511** | .433** | .514** | .433** | .460** | .375* | .560** | .517** | .589** | .564** | .445** | .314* | .495** | .404** | .438** | .643** | .388** | .416** | .064 | .296* | .700** |
| .000 | .003 | .000 | .003 | .001 | .011 | .000 | .000 | .000 | .000 | .002 | .036 | .001 | .006 | .003 | .000 | .008 | .004 | .675 | .049 | .000 |
| 45 | 45 | 45 | 45 | 45 | 45 | 45 | 45 | 45 | 45 | 45 | 45 | 45 | 45 | 45 | 45 | 45 | 45 | 45 | 45 | 45 |
| .543** | .624** | .410** | .569** | .447** | .433** | .562** | .643** | .604** | .544** | .511** | .270 | .537** | .632** | .540** | .623** | .514** | .279 | .106 | .342* | .739** |
| .000 | .000 | .005 | .000 | .002 | .003 | .000 | .000 | .000 | .000 | .000 | .073 | .000 | .000 | .000 | .000 | .000 | .063 | .489 | .022 | .000 |
| 45 | 45 | 45 | 45 | 45 | 45 | 45 | 45 | 45 | 45 | 45 | 45 | 45 | 45 | 45 | 45 | 45 | 45 | 45 | 45 | 45 |
| .530** | .561** | .479** | .501** | .386** | .410** | .640** | .536** | .578** | .669** | .372* | .248 | .429** | .519** | .612** | .524** | .434** | .395** | .431** | .488** | .760** |
| .000 | .000 | .001 | .000 | .009 | .005 | .000 | .000 | .000 | .000 | .012 | .100 | .003 | .000 | .000 | .000 | .003 | .007 | .003 | .001 | .000 |
| 45 | 45 | 45 | 45 | 45 | 45 | 45 | 45 | 45 | 45 | 45 | 45 | 45 | 45 | 45 | 45 | 45 | 45 | 45 | 45 | 45 |
| .444** | .737** | .292 | .578** | .429** | .483** | .486** | .298* | .535** | .623** | .508** | .323* | .555** | .487** | .453** | .598** | .687** | .315* | .358* | .410** | .720** |
| .002 | .000 | .052 | .000 | .003 | .001 | .001 | .046 | .000 | .000 | .000 | .031 | .000 | .001 | .002 | .000 | .000 | .035 | .016 | .005 | .000 |
| 45 | 45 | 45 | 45 | 45 | 45 | 45 | 45 | 45 | 45 | 45 | 45 | 45 | 45 | 45 | 45 | 45 | 45 | 45 | 45 | 45 |

| | | | | | | | | | | | | | | | | | | | | |
|---|---|---|---|---|---|---|---|---|---|---|---|---|---|---|---|---|---|---|---|---|
| .384** | .566** | .576** | .363* | .547** | .590** | .537** | .491** | .673** | .599** | .569** | .481** | .523** | .491** | .413** | .736** | .573** | .428** | .151 | .277 | .764** |
| .009 | .000 | .000 | .014 | .000 | .000 | .000 | .001 | .000 | .000 | .000 | .001 | .000 | .001 | .005 | .000 | .000 | .003 | .323 | .065 | .000 |
| 45 | 45 | 45 | 45 | 45 | 45 | 45 | 45 | 45 | 45 | 45 | 45 | 45 | 45 | 45 | 45 | 45 | 45 | 45 | 45 | 45 |
| .590** | .614** | .556** | .503** | .479** | .553** | .648** | .451** | .688** | .777** | .526** | .310* | .573** | .604** | .577** | .702** | .526** | .404** | .213 | .492** | .834** |
| .000 | .000 | .000 | .000 | .001 | .000 | .000 | .002 | .000 | .000 | .000 | .038 | .000 | .000 | .000 | .000 | .000 | .006 | .160 | .001 | .000 |
| 45 | 45 | 45 | 45 | 45 | 45 | 45 | 45 | 45 | 45 | 45 | 45 | 45 | 45 | 45 | 45 | 45 | 45 | 45 | 45 | 45 |
| .688** | .583** | .279 | .377* | .562** | .275 | .500** | .371* | .500** | .554** | .289 | .235 | .320* | .562** | .507** | .322* | .579** | .390** | .349* | .258 | .651** |
| .000 | .000 | .063 | .011 | .000 | .068 | .000 | .012 | .000 | .000 | .054 | .120 | .032 | .000 | .000 | .031 | .000 | .008 | .019 | .087 | .000 |
| 45 | 45 | 45 | 45 | 45 | 45 | 45 | 45 | 45 | 45 | 45 | 45 | 45 | 45 | 45 | 45 | 45 | 45 | 45 | 45 | 45 |
| .509** | .482** | .623** | .482** | .512** | .471** | .567** | .575** | .656** | .628** | .383** | .568** | .498** | .512** | .550** | .671** | .491** | .417** | .190 | .257 | .758** |
| .000 | .001 | .000 | .001 | .000 | .001 | .000 | .000 | .000 | .000 | .009 | .000 | .000 | .000 | .000 | .000 | .001 | .004 | .210 | .088 | .000 |
| 45 | 45 | 45 | 45 | 45 | 45 | 45 | 45 | 45 | 45 | 45 | 45 | 45 | 45 | 45 | 45 | 45 | 45 | 45 | 45 | 45 |
| .438** | .770** | .382** | .414** | .416** | .431** | .312* | .553** | .602** | .702** | .393** | .286 | .344* | .549** | .510** | .579** | .582** | .354* | .151 | .234 | .710** |
| .003 | .000 | .010 | .005 | .004 | .003 | .037 | .000 | .000 | .000 | .008 | .057 | .021 | .000 | .000 | .000 | .000 | .017 | .321 | .122 | .000 |
| 45 | 45 | 45 | 45 | 45 | 45 | 45 | 45 | 45 | 45 | 45 | 45 | 45 | 45 | 45 | 45 | 45 | 45 | 45 | 45 | 45 |
| .433** | .544** | .352* | .410** | .364* | .360* | .324* | .450** | .448** | .586** | .108 | .014 | .284 | .514** | .687** | .382** | .381** | .340* | .386** | .313* | .592** |
| .003 | .000 | .018 | .005 | .014 | .015 | .030 | .002 | .002 | .000 | .480 | .929 | .058 | .000 | .000 | .010 | .010 | .022 | .009 | .036 | .000 |
| 45 | 45 | 45 | 45 | 45 | 45 | 45 | 45 | 45 | 45 | 45 | 45 | 45 | 45 | 45 | 45 | 45 | 45 | 45 | 45 | 45 |
| .543** | .573** | .501** | .513** | .546** | .559** | .545** | .503** | .497** | .736** | .348* | .295* | .418** | .612** | .453** | .667** | .587** | .395** | .393** | .274 | .754** |
| .000 | .000 | .000 | .000 | .000 | .000 | .000 | .000 | .001 | .000 | .019 | .050 | .004 | .000 | .002 | .000 | .000 | .007 | .008 | .068 | .000 |
| 45 | 45 | 45 | 45 | 45 | 45 | 45 | 45 | 45 | 45 | 45 | 45 | 45 | 45 | 45 | 45 | 45 | 45 | 45 | 45 | 45 |
| .427** | .581** | .559** | .522** | .574** | .484** | .452** | .489** | .672** | .748** | .450** | .403** | .435** | .508** | .412** | .674** | .571** | .406** | .213 | .266 | .774** |
| .003 | .000 | .000 | .000 | .000 | .001 | .002 | .001 | .000 | .000 | .002 | .006 | .003 | .000 | .005 | .000 | .000 | .006 | .161 | .078 | .000 |

| | | | | | | | | | | | | | | | | | | | | |
|---|---|---|---|---|---|---|---|---|---|---|---|---|---|---|---|---|---|---|---|---|
| 45 | 45 | 45 | 45 | 45 | 45 | 45 | 45 | 45 | 45 | 45 | 45 | 45 | 45 | 45 | 45 | 45 | 45 | 45 | 45 | 45 |
| 1 | .612** | .562** | .500** | .453** | .458** | .625** | .316* | .378* | .472** | .257 | .196 | .534** | .640** | .666** | .499** | .428** | .287 | .379* | .362* | .695** |
| | .000 | .000 | .000 | .002 | .002 | .000 | .035 | .011 | .001 | .088 | .196 | .000 | .000 | .000 | .000 | .003 | .056 | .010 | .015 | .000 |
| 45 | 45 | 45 | 45 | 45 | 45 | 45 | 45 | 45 | 45 | 45 | 45 | 45 | 45 | 45 | 45 | 45 | 45 | 45 | 45 | 45 |
| .612** | 1 | .484** | .631** | .429** | .483** | .486** | .395** | .654** | .741** | .561** | .186 | .605** | .722** | .689** | .682** | .630** | .358* | .190 | .410** | .800** |
| .000 | | .001 | .000 | .003 | .001 | .001 | .007 | .000 | .000 | .000 | .222 | .000 | .000 | .000 | .000 | .000 | .016 | .210 | .005 | .000 |
| 45 | 45 | 45 | 45 | 45 | 45 | 45 | 45 | 45 | 45 | 45 | 45 | 45 | 45 | 45 | 45 | 45 | 45 | 45 | 45 | 45 |
| .562** | .484** | 1 | .436** | .597** | .606** | .675** | .417** | .429** | .449** | .396** | .179 | .528** | .597** | .637** | .704** | .333* | .450** | .194 | .352* | .697** |
| .000 | .001 | | .003 | .000 | .000 | .000 | .004 | .003 | .002 | .007 | .239 | .000 | .000 | .000 | .000 | .026 | .002 | .201 | .018 | .000 |
| 45 | 45 | 45 | 45 | 45 | 45 | 45 | 45 | 45 | 45 | 45 | 45 | 45 | 45 | 45 | 45 | 45 | 45 | 45 | 45 | 45 |
| .500** | .631** | .436** | 1 | .487** | .433** | .538** | .298* | .476** | .682** | .455** | .117 | .655** | .605** | .630** | .640** | .405** | .315* | .358* | .477** | .709** |
| .000 | .000 | .003 | | .001 | .003 | .000 | .046 | .001 | .000 | .002 | .443 | .000 | .000 | .000 | .000 | .006 | .035 | .016 | .001 | .000 |
| 45 | 45 | 45 | 45 | 45 | 45 | 45 | 45 | 45 | 45 | 45 | 45 | 45 | 45 | 45 | 45 | 45 | 45 | 45 | 45 | 45 |
| .453** | .429** | .597** | .487** | 1 | .460** | .540** | .468** | .444** | .578** | .307* | .210 | .460** | .606** | .443** | .568** | .484** | .540** | .237 | .213 | .676** |
| .002 | .003 | .000 | .001 | | .001 | .000 | .001 | .002 | .000 | .040 | .165 | .001 | .000 | .002 | .000 | .001 | .000 | .116 | .159 | .000 |
| 45 | 45 | 45 | 45 | 45 | 45 | 45 | 45 | 45 | 45 | 45 | 45 | 45 | 45 | 45 | 45 | 45 | 45 | 45 | 45 | 45 |
| .458** | .483** | .606** | .433** | .460** | 1 | .610** | .609** | .476** | .451** | .445** | .248 | .448** | .517** | .494** | .723** | .657** | .541** | .492** | .488** | .717** |
| .002 | .001 | .000 | .003 | .001 | | .000 | .000 | .001 | .002 | .002 | .100 | .002 | .000 | .001 | .000 | .000 | .000 | .001 | .001 | .000 |
| 45 | 45 | 45 | 45 | 45 | 45 | 45 | 45 | 45 | 45 | 45 | 45 | 45 | 45 | 45 | 45 | 45 | 45 | 45 | 45 | 45 |
| .625** | .486** | .675** | .538** | .540** | .610** | 1 | .513** | .513** | .515** | .536** | .255 | .607** | .715** | .628** | .673** | .430** | .481** | .434** | .524** | .774** |
| .000 | .001 | .000 | .000 | .000 | .000 | | .000 | .000 | .000 | .000 | .091 | .000 | .000 | .000 | .000 | .003 | .001 | .003 | .000 | .000 |
| 45 | 45 | 45 | 45 | 45 | 45 | 45 | 45 | 45 | 45 | 45 | 45 | 45 | 45 | 45 | 45 | 45 | 45 | 45 | 45 | 45 |
| .316* | .395** | .417** | .298* | .468** | .609** | .513** | 1 | .643** | .463** | .398** | .333* | .363* | .414** | .502** | .626** | .547** | .568** | .246 | .326* | .672** |

| | | | | | | | | | | | | | | | | | | | | |
|---|---|---|---|---|---|---|---|---|---|---|---|---|---|---|---|---|---|---|---|---|
| .035 | .007 | .004 | .046 | .001 | .000 | .000 | | .000 | .001 | .007 | .025 | .014 | .005 | .000 | .000 | .000 | .000 | .103 | .029 | .000 |
| 45 | 45 | 45 | 45 | 45 | 45 | 45 | 45 | 45 | 45 | 45 | 45 | 45 | 45 | 45 | 45 | 45 | 45 | 45 | 45 | 45 |
| .378* | .654** | .429** | .476** | .444** | .476** | .513** | .643** | 1 | .628** | .620** | .330* | .554** | .576** | .482** | .700** | .623** | .430** | .101 | .296* | .775** |
| .011 | .000 | .003 | .001 | .002 | .001 | .000 | .000 | | .000 | .000 | .027 | .000 | .000 | .001 | .000 | .000 | .003 | .510 | .048 | .000 |
| 45 | 45 | 45 | 45 | 45 | 45 | 45 | 45 | 45 | 45 | 45 | 45 | 45 | 45 | 45 | 45 | 45 | 45 | 45 | 45 | 45 |
| .472** | .741** | .449** | .682** | .578** | .451** | .515** | .463** | .628** | 1 | .475** | .247 | .484** | .644** | .608** | .681** | .477** | .363* | .251 | .436** | .814** |
| .001 | .000 | .002 | .000 | .000 | .002 | .000 | .001 | .000 | | .001 | .102 | .001 | .000 | .000 | .000 | .001 | .014 | .096 | .003 | .000 |
| 45 | 45 | 45 | 45 | 45 | 45 | 45 | 45 | 45 | 45 | 45 | 45 | 45 | 45 | 45 | 45 | 45 | 45 | 45 | 45 | 45 |
| .257 | .561** | .396** | .455** | .307* | .445** | .536** | .398** | .620** | .475** | 1 | .468** | .671** | .484** | .343* | .718** | .464** | .350* | .068 | .514** | .634** |
| .088 | .000 | .007 | .002 | .040 | .002 | .000 | .007 | .000 | .001 | | .001 | .000 | .001 | .021 | .000 | .001 | .018 | .659 | .000 | .000 |
| 45 | 45 | 45 | 45 | 45 | 45 | 45 | 45 | 45 | 45 | 45 | 45 | 45 | 45 | 45 | 45 | 45 | 45 | 45 | 45 | 45 |
| .196 | .186 | .179 | .117 | .210 | .248 | .255 | .333* | .330* | .247 | .468** | 1 | .371* | .134 | .095 | .376* | .389** | .220 | .233 | .188 | .397** |
| .196 | .222 | .239 | .443 | .165 | .100 | .091 | .025 | .027 | .102 | .001 | | .012 | .380 | .535 | .011 | .008 | .146 | .124 | .215 | .007 |
| 45 | 45 | 45 | 45 | 45 | 45 | 45 | 45 | 45 | 45 | 45 | 45 | 45 | 45 | 45 | 45 | 45 | 45 | 45 | 45 | 45 |
| .534** | .605** | .528** | .655** | .460** | .448** | .607** | .363* | .554** | .484** | .671** | .371* | 1 | .571** | .541** | .703** | .477** | .357* | .138 | .666** | .704** |
| .000 | .000 | .000 | .000 | .001 | .002 | .000 | .014 | .000 | .001 | .000 | .012 | | .000 | .000 | .000 | .001 | .016 | .367 | .000 | .000 |
| 45 | 45 | 45 | 45 | 45 | 45 | 45 | 45 | 45 | 45 | 45 | 45 | 45 | 45 | 45 | 45 | 45 | 45 | 45 | 45 | 45 |
| .640** | .722** | .597** | .605** | .606** | .517** | .715** | .414** | .576** | .644** | .484** | .134 | .571** | 1 | .771** | .615** | .484** | .346* | .362* | .364* | .776** |
| .000 | .000 | .000 | .000 | .000 | .000 | .000 | .005 | .000 | .000 | .001 | .380 | .000 | | .000 | .000 | .001 | .020 | .014 | .014 | .000 |
| 45 | 45 | 45 | 45 | 45 | 45 | 45 | 45 | 45 | 45 | 45 | 45 | 45 | 45 | 45 | 45 | 45 | 45 | 45 | 45 | 45 |
| .666** | .689** | .637** | .630** | .443** | .494** | .628** | .502** | .482** | .608** | .343* | .095 | .541** | .771** | 1 | .558** | .460** | .432** | .450** | .537** | .761** |
| .000 | .000 | .000 | .000 | .002 | .001 | .000 | .000 | .001 | .000 | .021 | .535 | .000 | .000 | | .000 | .001 | .003 | .002 | .000 | .000 |
| 45 | 45 | 45 | 45 | 45 | 45 | 45 | 45 | 45 | 45 | 45 | 45 | 45 | 45 | 45 | 45 | 45 | 45 | 45 | 45 | 45 |

| | | | | | | | | | | | | | | | | | | | | |
|---|---|---|---|---|---|---|---|---|---|---|---|---|---|---|---|---|---|---|---|---|
| .499** | .682** | .704** | .640** | .568** | .723** | .673** | .626** | .700** | .681** | .718** | .376* | .703** | .615** | .558** | 1 | .550** | .514** | .179 | .436** | .859** |
| .000 | .000 | .000 | .000 | .000 | .000 | .000 | .000 | .000 | .000 | .000 | .011 | .000 | .000 | .000 | | .000 | .000 | .240 | .003 | .000 |
| 45 | 45 | 45 | 45 | 45 | 45 | 45 | 45 | 45 | 45 | 45 | 45 | 45 | 45 | 45 | 45 | 45 | 45 | 45 | 45 | 45 |
| .428** | .630** | .333* | .405** | .484** | .657** | .430** | .547** | .623** | .477** | .464** | .389** | .477** | .484** | .460** | .550** | 1 | .570** | .467** | .381** | .730** |
| .003 | .000 | .026 | .006 | .001 | .000 | .003 | .000 | .000 | .001 | .001 | .008 | .001 | .001 | .001 | .000 | | .000 | .001 | .010 | .000 |
| 45 | 45 | 45 | 45 | 45 | 45 | 45 | 45 | 45 | 45 | 45 | 45 | 45 | 45 | 45 | 45 | 45 | 45 | 45 | 45 | 45 |
| .287 | .358* | .450** | .315* | .540** | .541** | .481** | .568** | .430** | .363* | .350* | .220 | .357* | .346* | .432** | .514** | .570** | 1 | .370* | .340* | .589** |
| .056 | .016 | .002 | .035 | .000 | .000 | .001 | .000 | .003 | .014 | .018 | .146 | .016 | .020 | .003 | .000 | .000 | | .012 | .022 | .000 |
| 45 | 45 | 45 | 45 | 45 | 45 | 45 | 45 | 45 | 45 | 45 | 45 | 45 | 45 | 45 | 45 | 45 | 45 | 45 | 45 | 45 |
| .379* | .190 | .194 | .358* | .237 | .492** | .434** | .246 | .101 | .251 | .068 | .233 | .138 | .362* | .450** | .179 | .467** | .370* | 1 | .386** | .424** |
| .010 | .210 | .201 | .016 | .116 | .001 | .003 | .103 | .510 | .096 | .659 | .124 | .367 | .014 | .002 | .240 | .001 | .012 | | .009 | .004 |
| 45 | 45 | 45 | 45 | 45 | 45 | 45 | 45 | 45 | 45 | 45 | 45 | 45 | 45 | 45 | 45 | 45 | 45 | 45 | 45 | 45 |
| .362* | .410** | .352* | .477** | .213 | .488** | .524** | .326* | .296* | .436** | .514** | .188 | .666** | .364* | .537** | .436** | .381** | .340* | .386** | 1 | .555** |
| .015 | .005 | .018 | .001 | .159 | .001 | .000 | .029 | .048 | .003 | .000 | .215 | .000 | .014 | .000 | .003 | .010 | .022 | .009 | | .000 |
| 45 | 45 | 45 | 45 | 45 | 45 | 45 | 45 | 45 | 45 | 45 | 45 | 45 | 45 | 45 | 45 | 45 | 45 | 45 | 45 | 45 |
| .695** | .800** | .697** | .709** | .676** | .717** | .774** | .672** | .775** | .814** | .634** | .397** | .704** | .776** | .761** | .859** | .730** | .589** | .424** | .555** | 1 |
| .000 | .000 | .000 | .000 | .000 | .000 | .000 | .000 | .000 | .000 | .000 | .007 | .000 | .000 | .000 | .000 | .000 | .000 | .004 | .000 | |
| 45 | 45 | 45 | 45 | 45 | 45 | 45 | 45 | 45 | 45 | 45 | 45 | 45 | 45 | 45 | 45 | 45 | 45 | 45 | 45 | 45 |

Lampiran 5 Pengujian Validitas Butir Instrumen Motivasi Kerja

| | | M1 | M2 | M3 | M4 | M5 | M6 | M7 | M8 | M9 | M10 | M11 | M12 | M13 | M14 | M15 | M16 |
|---|---|---|---|---|---|---|---|---|---|---|---|---|---|---|---|---|---|
| M1 | Pearson Correlation | 1 | .759** | .265 | .193 | .536** | .239 | .512** | .481** | .383** | .496** | .363* | .291 | .283 | .109 | .496** | .316* |
| | Sig. (2-tailed) | | .000 | .079 | .205 | .000 | .114 | .000 | .001 | .009 | .001 | .014 | .053 | .060 | .474 | .001 | .034 |
| | N | 45 | 45 | 45 | 45 | 45 | 45 | 45 | 45 | 45 | 45 | 45 | 45 | 45 | 45 | 45 | 45 |
| M2 | Pearson Correlation | .759** | 1 | .404** | .328* | .479** | .432** | .533** | .506** | .336* | .478** | .201 | .292 | .373* | .298* | .341* | .290 |
| | Sig. (2-tailed) | .000 | | .006 | .028 | .001 | .003 | .000 | .000 | .024 | .001 | .186 | .051 | .012 | .047 | .022 | .054 |
| | N | 45 | 45 | 45 | 45 | 45 | 45 | 45 | 45 | 45 | 45 | 45 | 45 | 45 | 45 | 45 | 45 |
| M3 | Pearson Correlation | .265 | .404** | 1 | .587** | .306* | .343* | .746** | .049 | .122 | .271 | .159 | .116 | .256 | .000 | .153 | .039 |
| | Sig. (2-tailed) | .079 | .006 | | .000 | .041 | .021 | .000 | .747 | .425 | .072 | .298 | .448 | .089 | 1.000 | .316 | .797 |
| | N | 45 | 45 | 45 | 45 | 45 | 45 | 45 | 45 | 45 | 45 | 45 | 45 | 45 | 45 | 45 | 45 |
| M4 | Pearson Correlation | .193 | .328* | .587** | 1 | .255 | .501** | .507** | .400** | .121 | .336* | .222 | .296* | .294* | .307* | .185 | .193 |
| | Sig. (2-tailed) | .205 | .028 | .000 | | .091 | .000 | .000 | .007 | .428 | .024 | .143 | .048 | .050 | .041 | .223 | .204 |
| | N | 45 | 45 | 45 | 45 | 45 | 45 | 45 | 45 | 45 | 45 | 45 | 45 | 45 | 45 | 45 | 45 |
| M5 | Pearson Correlation | .536** | .479** | .306* | .255 | 1 | .664** | .491** | .303* | .476** | .770** | .474** | .434** | .708** | .193 | .669** | .328* |
| | Sig. (2-tailed) | .000 | .001 | .041 | .091 | | .000 | .001 | .043 | .001 | .000 | .001 | .003 | .000 | .203 | .000 | .028 |
| | N | 45 | 45 | 45 | 45 | 45 | 45 | 45 | 45 | 45 | 45 | 45 | 45 | 45 | 45 | 45 | 45 |
| M6 | Pearson Correlation | .239 | .432** | .343* | .501** | .664** | 1 | .312* | .312* | .281 | .574** | .286 | .348* | .503** | .367* | .285 | .411** |
| | Sig. (2-tailed) | .114 | .003 | .021 | .000 | .000 | | .037 | .037 | .062 | .000 | .056 | .019 | .000 | .013 | .058 | .005 |
| | N | 45 | 45 | 45 | 45 | 45 | 45 | 45 | 45 | 45 | 45 | 45 | 45 | 45 | 45 | 45 | 45 |
| M7 | Pearson Correlation | .512** | .533** | .746** | .507** | .491** | .312* | 1 | .153 | .276 | .598** | .344* | .278 | .344* | .115 | .386** | .063 |
| | Sig. (2-tailed) | .000 | .000 | .000 | .000 | .001 | .037 | | .315 | .066 | .000 | .020 | .064 | .021 | .451 | .009 | .680 |

| | | | | | | | | | | | | | | | | | |
|---|---|---|---|---|---|---|---|---|---|---|---|---|---|---|---|---|---|
| | N | 45 | 45 | 45 | 45 | 45 | 45 | 45 | 45 | 45 | 45 | 45 | 45 | 45 | 45 | 45 | 45 |
| M8 | Pearson Correlation | .481** | .506** | .049 | .400** | .303* | .312* | .153 | 1 | .463** | .334* | .484** | .473** | .412** | .465** | .424** | .497** |
| | Sig. (2-tailed) | .001 | .000 | .747 | .007 | .043 | .037 | .315 | | .001 | .025 | .001 | .001 | .005 | .001 | .004 | .001 |
| | N | 45 | 45 | 45 | 45 | 45 | 45 | 45 | 45 | 45 | 45 | 45 | 45 | 45 | 45 | 45 | 45 |
| M9 | Pearson Correlation | .383** | .336* | .122 | .121 | .476** | .281 | .276 | .463** | 1 | .520** | .425** | .389** | .462** | .282 | .619** | .535** |
| | Sig. (2-tailed) | .009 | .024 | .425 | .428 | .001 | .062 | .066 | .001 | | .000 | .004 | .008 | .001 | .061 | .000 | .000 |
| | N | 45 | 45 | 45 | 45 | 45 | 45 | 45 | 45 | 45 | 45 | 45 | 45 | 45 | 45 | 45 | 45 |
| M10 | Pearson Correlation | .496** | .478** | .271 | .336* | .770** | .574** | .598** | .334* | .520** | 1 | .555** | .620** | .577** | .409** | .656** | .483** |
| | Sig. (2-tailed) | .001 | .001 | .072 | .024 | .000 | .000 | .000 | .025 | .000 | | .000 | .000 | .000 | .005 | .000 | .001 |
| | N | 45 | 45 | 45 | 45 | 45 | 45 | 45 | 45 | 45 | 45 | 45 | 45 | 45 | 45 | 45 | 45 |
| M11 | Pearson Correlation | .363* | .201 | .159 | .222 | .474** | .286 | .344* | .484** | .425** | .555** | 1 | .760** | .456** | .427** | .637** | .456** |
| | Sig. (2-tailed) | .014 | .186 | .298 | .143 | .001 | .056 | .020 | .001 | .004 | .000 | | .000 | .002 | .003 | .000 | .002 |
| | N | 45 | 45 | 45 | 45 | 45 | 45 | 45 | 45 | 45 | 45 | 45 | 45 | 45 | 45 | 45 | 45 |
| M12 | Pearson Correlation | .291 | .292 | .116 | .296* | .434** | .348* | .278 | .473** | .389** | .620** | .760** | 1 | .454** | .483** | .620** | .449** |
| | Sig. (2-tailed) | .053 | .051 | .448 | .048 | .003 | .019 | .064 | .001 | .008 | .000 | .000 | | .002 | .001 | .000 | .002 |
| | N | 45 | 45 | 45 | 45 | 45 | 45 | 45 | 45 | 45 | 45 | 45 | 45 | 45 | 45 | 45 | 45 |
| M13 | Pearson Correlation | .283 | .373* | .256 | .294* | .708** | .503** | .344* | .412** | .462** | .577** | .456** | .454** | 1 | .376* | .577** | .261 |
| | Sig. (2-tailed) | .060 | .012 | .089 | .050 | .000 | .000 | .021 | .005 | .001 | .000 | .002 | .002 | | .011 | .000 | .084 |
| | N | 45 | 45 | 45 | 45 | 45 | 45 | 45 | 45 | 45 | 45 | 45 | 45 | 45 | 45 | 45 | 45 |
| M14 | Pearson Correlation | .109 | .298* | .000 | .307* | .193 | .367* | .115 | .465** | .282 | .409** | .427** | .483** | .376* | 1 | .409** | .460** |
| | Sig. (2-tailed) | .474 | .047 | 1.000 | .041 | .203 | .013 | .451 | .001 | .061 | .005 | .003 | .001 | .011 | | .005 | .001 |
| | N | 45 | 45 | 45 | 45 | 45 | 45 | 45 | 45 | 45 | 45 | 45 | 45 | 45 | 45 | 45 | 45 |
| M15 | Pearson Correlation | .496** | .341* | .153 | .185 | .669** | .285 | .386** | .424** | .619** | .656** | .637** | .620** | .577** | .409** | 1 | .483** |

| | | | | | | | | | | | | | | | | | |
|---|---|---|---|---|---|---|---|---|---|---|---|---|---|---|---|---|---|
| | Sig. (2-tailed) | .001 | .022 | .316 | .223 | .000 | .058 | .009 | .004 | .000 | .000 | .000 | .000 | .000 | .005 | | .001 |
| | N | 45 | 45 | 45 | 45 | 45 | 45 | 45 | 45 | 45 | 45 | 45 | 45 | 45 | 45 | 45 | 45 |
| M16 | Pearson Correlation | .316* | .290 | .039 | .193 | .328* | .411** | .063 | .497** | .535** | .483** | .456** | .449** | .261 | .460** | .483** | 1 |
| | Sig. (2-tailed) | .034 | .054 | .797 | .204 | .028 | .005 | .680 | .001 | .000 | .001 | .002 | .002 | .084 | .001 | .001 | |
| | N | 45 | 45 | 45 | 45 | 45 | 45 | 45 | 45 | 45 | 45 | 45 | 45 | 45 | 45 | 45 | 45 |
| M17 | Pearson Correlation | .232 | .468** | .318* | .406** | .475** | .589** | .305* | .421** | .320* | .494** | .297* | .365* | .497** | .416** | .309* | .259 |
| | Sig. (2-tailed) | .126 | .001 | .034 | .006 | .001 | .000 | .042 | .004 | .032 | .001 | .047 | .014 | .001 | .005 | .039 | .086 |
| | N | 45 | 45 | 45 | 45 | 45 | 45 | 45 | 45 | 45 | 45 | 45 | 45 | 45 | 45 | 45 | 45 |
| M18 | Pearson Correlation | .323* | .353* | .123 | .186 | .349* | .257 | .377* | .189 | .396** | .524** | .410** | .484** | .341* | .501** | .524** | .563** |
| | Sig. (2-tailed) | .031 | .017 | .419 | .220 | .019 | .088 | .011 | .214 | .007 | .000 | .005 | .001 | .022 | .000 | .000 | .000 |
| | N | 45 | 45 | 45 | 45 | 45 | 45 | 45 | 45 | 45 | 45 | 45 | 45 | 45 | 45 | 45 | 45 |
| M19 | Pearson Correlation | .207 | .480** | .464** | .438** | .560** | .447** | .345* | .344* | .408** | .441** | .160 | .318* | .621** | .329* | .441** | .343* |
| | Sig. (2-tailed) | .173 | .001 | .001 | .003 | .000 | .002 | .020 | .021 | .005 | .002 | .293 | .033 | .000 | .027 | .002 | .021 |
| | N | 45 | 45 | 45 | 45 | 45 | 45 | 45 | 45 | 45 | 45 | 45 | 45 | 45 | 45 | 45 | 45 |
| M20 | Pearson Correlation | .146 | .145 | .174 | .167 | .320* | .224 | .157 | .003 | .144 | .219 | .055 | .072 | .248 | .105 | .274 | .279 |
| | Sig. (2-tailed) | .339 | .341 | .254 | .273 | .032 | .139 | .303 | .987 | .347 | .148 | .718 | .637 | .100 | .493 | .068 | .063 |
| | N | 45 | 45 | 45 | 45 | 45 | 45 | 45 | 45 | 45 | 45 | 45 | 45 | 45 | 45 | 45 | 45 |
| M21 | Pearson Correlation | .122 | .328* | .433** | .408** | .344* | .332* | .383** | .242 | .208 | .486** | .366* | .518** | .365* | .491** | .486** | .508** |
| | Sig. (2-tailed) | .424 | .028 | .003 | .005 | .021 | .026 | .009 | .109 | .171 | .001 | .013 | .000 | .014 | .001 | .001 | .000 |
| | N | 45 | 45 | 45 | 45 | 45 | 45 | 45 | 45 | 45 | 45 | 45 | 45 | 45 | 45 | 45 | 45 |
| M22 | Pearson Correlation | .602** | .384** | .257 | .437** | .697** | .480** | .411** | .393** | .431** | .571** | .532** | .527** | .541** | .327* | .749** | .538** |
| | Sig. (2-tailed) | .000 | .009 | .089 | .003 | .000 | .001 | .005 | .008 | .003 | .000 | .000 | .000 | .000 | .028 | .000 | .000 |
| | N | 45 | 45 | 45 | 45 | 45 | 45 | 45 | 45 | 45 | 45 | 45 | 45 | 45 | 45 | 45 | 45 |

| | | | | | | | | | | | | | | | | | |
|---|---|---|---|---|---|---|---|---|---|---|---|---|---|---|---|---|---|
| M23 | Pearson Correlation | .405** | .468** | .127 | .324* | .475** | .485** | .152 | .519** | .320* | .402** | .386** | .456** | .497** | .302* | .494** | .492** |
| | Sig. (2-tailed) | .006 | .001 | .406 | .030 | .001 | .001 | .317 | .000 | .032 | .006 | .009 | .002 | .001 | .044 | .001 | .001 |
| | N | 45 | 45 | 45 | 45 | 45 | 45 | 45 | 45 | 45 | 45 | 45 | 45 | 45 | 45 | 45 | 45 |
| M24 | Pearson Correlation | .331* | .441** | .094 | .127 | .277 | .345* | .025 | .477** | .377* | .287 | .327* | .488** | .284 | .171 | .401** | .572** |
| | Sig. (2-tailed) | .026 | .002 | .539 | .407 | .066 | .020 | .870 | .001 | .011 | .056 | .028 | .001 | .059 | .262 | .006 | .000 |
| | N | 45 | 45 | 45 | 45 | 45 | 45 | 45 | 45 | 45 | 45 | 45 | 45 | 45 | 45 | 45 | 45 |
| M25 | Pearson Correlation | .327* | .512** | .595** | .551** | .404** | .317* | .586** | .259 | .263 | .419** | .157 | .219 | .415** | .148 | .252 | .067 |
| | Sig. (2-tailed) | .028 | .000 | .000 | .000 | .006 | .034 | .000 | .086 | .081 | .004 | .303 | .148 | .005 | .333 | .094 | .662 |
| | N | 45 | 45 | 45 | 45 | 45 | 45 | 45 | 45 | 45 | 45 | 45 | 45 | 45 | 45 | 45 | 45 |
| M26 | Pearson Correlation | .562** | .645** | .195 | .404** | .701** | .504** | .380** | .522** | .263 | .586** | .318* | .384** | .494** | .352* | .503** | .347* |
| | Sig. (2-tailed) | .000 | .000 | .200 | .006 | .000 | .000 | .010 | .000 | .081 | .000 | .033 | .009 | .001 | .018 | .000 | .020 |
| | N | 45 | 45 | 45 | 45 | 45 | 45 | 45 | 45 | 45 | 45 | 45 | 45 | 45 | 45 | 45 | 45 |
| M27 | Pearson Correlation | .300* | .510** | .480** | .507** | .415** | .325* | .414** | .416** | .280 | .488** | .454** | .525** | .390** | .466** | .411** | .587** |
| | Sig. (2-tailed) | .045 | .000 | .001 | .000 | .005 | .029 | .005 | .005 | .062 | .001 | .002 | .000 | .008 | .001 | .005 | .000 |
| | N | 45 | 45 | 45 | 45 | 45 | 45 | 45 | 45 | 45 | 45 | 45 | 45 | 45 | 45 | 45 | 45 |
| M28 | Pearson Correlation | .091 | .141 | .204 | .255 | .183 | .216 | .108 | .170 | .139 | .212 | .207 | .227 | .089 | .232 | .212 | .493** |
| | Sig. (2-tailed) | .552 | .357 | .178 | .091 | .228 | .153 | .480 | .264 | .363 | .163 | .172 | .133 | .563 | .126 | .163 | .001 |
| | N | 45 | 45 | 45 | 45 | 45 | 45 | 45 | 45 | 45 | 45 | 45 | 45 | 45 | 45 | 45 | 45 |
| M29 | Pearson Correlation | .151 | .322* | .410** | .208 | .217 | .218 | .398** | .011 | .170 | .322* | .050 | .081 | .176 | .217 | .199 | .318* |
| | Sig. (2-tailed) | .322 | .031 | .005 | .171 | .153 | .151 | .007 | .940 | .265 | .031 | .745 | .598 | .248 | .152 | .189 | .033 |
| | N | 45 | 45 | 45 | 45 | 45 | 45 | 45 | 45 | 45 | 45 | 45 | 45 | 45 | 45 | 45 | 45 |
| Totalmotivasi | Pearson Correlation | .563** | .667** | .514** | .564** | .718** | .618** | .608** | .550** | .544** | .758** | .570** | .623** | .647** | .516** | .697** | .631** |
| | Sig. (2-tailed) | .000 | .000 | .000 | .000 | .000 | .000 | .000 | .000 | .000 | .000 | .000 | .000 | .000 | .000 | .000 | .000 |

| | | | | | | | | | | | | | | | | |
|---|---|---|---|---|---|---|---|---|---|---|---|---|---|---|---|---|
| N | 45 | 45 | 45 | 45 | 45 | 45 | 45 | 45 | 45 | 45 | 45 | 45 | 45 | 45 | 45 | 45 |

| M17 | M18 | M19 | M20 | M21 | M22 | M23 | M24 | M25 | M26 | M27 | M28 | M29 | Total motivasi Kerja |
|---|---|---|---|---|---|---|---|---|---|---|---|---|---|
| .232 | .323* | .207 | .146 | .122 | .602** | .405** | .331* | .327* | .562** | .300* | .091 | .151 | .563** |
| .126 | .031 | .173 | .339 | .424 | .000 | .006 | .026 | .028 | .000 | .045 | .552 | .322 | .000 |
| 45 | 45 | 45 | 45 | 45 | 45 | 45 | 45 | 45 | 45 | 45 | 45 | 45 | 45 |
| .468** | .353* | .480** | .145 | .328* | .384** | .468** | .441** | .512** | .645** | .510** | .141 | .322* | .667** |
| .001 | .017 | .001 | .341 | .028 | .009 | .001 | .002 | .000 | .000 | .000 | .357 | .031 | .000 |
| 45 | 45 | 45 | 45 | 45 | 45 | 45 | 45 | 45 | 45 | 45 | 45 | 45 | 45 |
| .318* | .123 | .464** | .174 | .433** | .257 | .127 | .094 | .595** | .195 | .480** | .204 | .410** | .514** |
| .034 | .419 | .001 | .254 | .003 | .089 | .406 | .539 | .000 | .200 | .001 | .178 | .005 | .000 |
| 45 | 45 | 45 | 45 | 45 | 45 | 45 | 45 | 45 | 45 | 45 | 45 | 45 | 45 |
| .406** | .186 | .438** | .167 | .408** | .437** | .324* | .127 | .551** | .404** | .507** | .255 | .208 | .564** |
| .006 | .220 | .003 | .273 | .005 | .003 | .030 | .407 | .000 | .006 | .000 | .091 | .171 | .000 |
| 45 | 45 | 45 | 45 | 45 | 45 | 45 | 45 | 45 | 45 | 45 | 45 | 45 | 45 |
| .475** | .349* | .560** | .320* | .344* | .697** | .475** | .277 | .404** | .701** | .415** | .183 | .217 | .718** |
| .001 | .019 | .000 | .032 | .021 | .000 | .001 | .066 | .006 | .000 | .005 | .228 | .153 | .000 |
| 45 | 45 | 45 | 45 | 45 | 45 | 45 | 45 | 45 | 45 | 45 | 45 | 45 | 45 |
| .589** | .257 | .447** | .224 | .332* | .480** | .485** | .345* | .317* | .504** | .325* | .216 | .218 | .618** |
| .000 | .088 | .002 | .139 | .026 | .001 | .001 | .020 | .034 | .000 | .029 | .153 | .151 | .000 |
| 45 | 45 | 45 | 45 | 45 | 45 | 45 | 45 | 45 | 45 | 45 | 45 | 45 | 45 |

| | | | | | | | | | | | | | |
|---|---|---|---|---|---|---|---|---|---|---|---|---|---|
| .305* | .377* | .345* | .157 | .383** | .411** | .152 | .025 | .586** | .380** | .414** | .108 | .398** | .608** |
| .042 | .011 | .020 | .303 | .009 | .005 | .317 | .870 | .000 | .010 | .005 | .480 | .007 | .000 |
| 45 | 45 | 45 | 45 | 45 | 45 | 45 | 45 | 45 | 45 | 45 | 45 | 45 | 45 |
| .421** | .189 | .344* | .003 | .242 | .393** | .519** | .477** | .259 | .522** | .416** | .170 | .011 | .550** |
| .004 | .214 | .021 | .987 | .109 | .008 | .000 | .001 | .086 | .000 | .005 | .264 | .940 | .000 |
| 45 | 45 | 45 | 45 | 45 | 45 | 45 | 45 | 45 | 45 | 45 | 45 | 45 | 45 |
| .320* | .396** | .408** | .144 | .208 | .431** | .320* | .377* | .263 | .263 | .280 | .139 | .170 | .544** |
| .032 | .007 | .005 | .347 | .171 | .003 | .032 | .011 | .081 | .081 | .062 | .363 | .265 | .000 |
| 45 | 45 | 45 | 45 | 45 | 45 | 45 | 45 | 45 | 45 | 45 | 45 | 45 | 45 |
| .494** | .524** | .441** | .219 | .486** | .571** | .402** | .287 | .419** | .586** | .488** | .212 | .322* | .758** |
| .001 | .000 | .002 | .148 | .001 | .000 | .006 | .056 | .004 | .000 | .001 | .163 | .031 | .000 |
| 45 | 45 | 45 | 45 | 45 | 45 | 45 | 45 | 45 | 45 | 45 | 45 | 45 | 45 |
| .297* | .410** | .160 | .055 | .366* | .532** | .386** | .327* | .157 | .318* | .454** | .207 | .050 | .570** |
| .047 | .005 | .293 | .718 | .013 | .000 | .009 | .028 | .303 | .033 | .002 | .172 | .745 | .000 |
| 45 | 45 | 45 | 45 | 45 | 45 | 45 | 45 | 45 | 45 | 45 | 45 | 45 | 45 |
| .365* | .484** | .318* | .072 | .518** | .527** | .456** | .488** | .219 | .384** | .525** | .227 | .081 | .623** |
| .014 | .001 | .033 | .637 | .000 | .000 | .002 | .001 | .148 | .009 | .000 | .133 | .598 | .000 |
| 45 | 45 | 45 | 45 | 45 | 45 | 45 | 45 | 45 | 45 | 45 | 45 | 45 | 45 |
| .497** | .341* | .621** | .248 | .365* | .541** | .497** | .284 | .415** | .494** | .390** | .089 | .176 | .647** |
| .001 | .022 | .000 | .100 | .014 | .000 | .001 | .059 | .005 | .001 | .008 | .563 | .248 | .000 |
| 45 | 45 | 45 | 45 | 45 | 45 | 45 | 45 | 45 | 45 | 45 | 45 | 45 | 45 |
| .416** | .501** | .329* | .105 | .491** | .327* | .302* | .171 | .148 | .352* | .466** | .232 | .217 | .516** |
| .005 | .000 | .027 | .493 | .001 | .028 | .044 | .262 | .333 | .018 | .001 | .126 | .152 | .000 |

| | | | | | | | | | | | | | |
|---|---|---|---|---|---|---|---|---|---|---|---|---|---|
| 45 | 45 | 45 | 45 | 45 | 45 | 45 | 45 | 45 | 45 | 45 | 45 | 45 | 45 |
| .309* | .524** | .441** | .274 | .486** | .749** | .494** | .401** | .252 | .503** | .411** | .212 | .199 | .697** |
| .039 | .000 | .002 | .068 | .001 | .000 | .001 | .006 | .094 | .000 | .005 | .163 | .189 | .000 |
| 45 | 45 | 45 | 45 | 45 | 45 | 45 | 45 | 45 | 45 | 45 | 45 | 45 | 45 |
| .259 | .563** | .343* | .279 | .508** | .538** | .492** | .572** | .067 | .347* | .587** | .493** | .318* | .631** |
| .086 | .000 | .021 | .063 | .000 | .000 | .001 | .000 | .662 | .020 | .000 | .001 | .033 | .000 |
| 45 | 45 | 45 | 45 | 45 | 45 | 45 | 45 | 45 | 45 | 45 | 45 | 45 | 45 |
| 1 | .354* | .435** | .079 | .243 | .289 | .400** | .411** | .330* | .601** | .411** | .077 | .133 | .570** |
| | .017 | .003 | .605 | .107 | .054 | .006 | .005 | .027 | .000 | .005 | .617 | .385 | .000 |
| 45 | 45 | 45 | 45 | 45 | 45 | 45 | 45 | 45 | 45 | 45 | 45 | 45 | 45 |
| .354* | 1 | .354* | .336* | .545** | .578** | .265 | .414** | .207 | .446** | .567** | .376* | .406** | .648** |
| .017 | | .017 | .024 | .000 | .000 | .078 | .005 | .172 | .002 | .000 | .011 | .006 | .000 |
| 45 | 45 | 45 | 45 | 45 | 45 | 45 | 45 | 45 | 45 | 45 | 45 | 45 | 45 |
| .435** | .354* | 1 | .335* | .579** | .469** | .435** | .351* | .591** | .591** | .615** | .373* | .377* | .710** |
| .003 | .017 | | .025 | .000 | .001 | .003 | .018 | .000 | .000 | .000 | .012 | .011 | .000 |
| 45 | 45 | 45 | 45 | 45 | 45 | 45 | 45 | 45 | 45 | 45 | 45 | 45 | 45 |
| .079 | .336* | .335* | 1 | .408** | .423** | .198 | .208 | .198 | .358* | .362* | .762** | .706** | .509** |
| .605 | .024 | .025 | | .005 | .004 | .192 | .169 | .193 | .016 | .015 | .000 | .000 | .000 |
| 45 | 45 | 45 | 45 | 45 | 45 | 45 | 45 | 45 | 45 | 45 | 45 | 45 | 45 |
| .243 | .545** | .579** | .408** | 1 | .437** | .324* | .427** | .478** | .404** | .773** | .441** | .495** | .711** |
| .107 | .000 | .000 | .005 | | .003 | .030 | .003 | .001 | .006 | .000 | .002 | .001 | .000 |
| 45 | 45 | 45 | 45 | 45 | 45 | 45 | 45 | 45 | 45 | 45 | 45 | 45 | 45 |
| .289 | .578** | .469** | .423** | .437** | 1 | .481** | .332* | .225 | .659** | .459** | .354* | .272 | .750** |

| | | | | | | | | | | | | | |
|---|---|---|---|---|---|---|---|---|---|---|---|---|---|
| .054 | .000 | .001 | .004 | .003 | | .001 | .026 | .136 | .000 | .002 | .017 | .071 | .000 |
| 45 | 45 | 45 | 45 | 45 | 45 | 45 | 45 | 45 | 45 | 45 | 45 | 45 | 45 |
| .400** | .265 | .435** | .198 | .324* | .481** | 1 | .658** | .330* | .511** | .493** | .191 | .133 | .612** |
| .006 | .078 | .003 | .192 | .030 | .001 | | .000 | .027 | .000 | .001 | .208 | .385 | .000 |
| 45 | 45 | 45 | 45 | 45 | 45 | 45 | 45 | 45 | 45 | 45 | 45 | 45 | 45 |
| .411** | .414** | .351* | .208 | .427** | .332* | .658** | 1 | .351* | .351* | .486** | .272 | .167 | .550** |
| .005 | .005 | .018 | .169 | .003 | .026 | .000 | | .018 | .018 | .001 | .070 | .273 | .000 |
| 45 | 45 | 45 | 45 | 45 | 45 | 45 | 45 | 45 | 45 | 45 | 45 | 45 | 45 |
| .330* | .207 | .591** | .198 | .478** | .225 | .330* | .351* | 1 | .350* | .489** | .191 | .284 | .585** |
| .027 | .172 | .000 | .193 | .001 | .136 | .027 | .018 | | .018 | .001 | .209 | .059 | .000 |
| 45 | 45 | 45 | 45 | 45 | 45 | 45 | 45 | 45 | 45 | 45 | 45 | 45 | 45 |
| .601** | .446** | .591** | .358* | .404** | .659** | .511** | .351* | .350* | 1 | .563** | .294* | .364* | .741** |
| .000 | .002 | .000 | .016 | .006 | .000 | .000 | .018 | .018 | | .000 | .050 | .014 | .000 |
| 45 | 45 | 45 | 45 | 45 | 45 | 45 | 45 | 45 | 45 | 45 | 45 | 45 | 45 |
| .411** | .567** | .615** | .362* | .773** | .459** | .493** | .486** | .489** | .563** | 1 | .491** | .487** | .794** |
| .005 | .000 | .000 | .015 | .000 | .002 | .001 | .001 | .001 | .000 | | .001 | .001 | .000 |
| 45 | 45 | 45 | 45 | 45 | 45 | 45 | 45 | 45 | 45 | 45 | 45 | 45 | 45 |
| .077 | .376* | .373* | .762** | .441** | .354* | .191 | .272 | .191 | .294* | .491** | 1 | .733** | .545** |
| .617 | .011 | .012 | .000 | .002 | .017 | .208 | .070 | .209 | .050 | .001 | | .000 | .000 |
| 45 | 45 | 45 | 45 | 45 | 45 | 45 | 45 | 45 | 45 | 45 | 45 | 45 | 45 |
| .133 | .406** | .377* | .706** | .495** | .272 | .133 | .167 | .284 | .364* | .487** | .733** | 1 | .575** |
| .385 | .006 | .011 | .000 | .001 | .071 | .385 | .273 | .059 | .014 | .001 | .000 | | .000 |
| 45 | 45 | 45 | 45 | 45 | 45 | 45 | 45 | 45 | 45 | 45 | 45 | 45 | 45 |

| | | | | | | | | | | | | | |
|---|---|---|---|---|---|---|---|---|---|---|---|---|---|
| .570** | .648** | .710** | .509** | .711** | .750** | .612** | .550** | .585** | .741** | .794** | .545** | .575** | 1 |
| .000 | .000 | .000 | .000 | .000 | .000 | .000 | .000 | .000 | .000 | .000 | .000 | .000 | |
| 45 | 45 | 45 | 45 | 45 | 45 | 45 | 45 | 45 | 45 | 45 | 45 | 45 | 45 |

UNIVERSITAS PENDIDIKAN GANESHA
UNDIKSHA

Lampiran 6 Pengujian Instrumen Validitas Butir Kinerja Pegawai

| | | Ki1 | Ki2 | Ki3 | Ki4 | Ki5 | Ki6 | Ki7 | ki8 | Ki9 | Ki10 | Ki11 | Ki12 | Ki13 | Ki14 | Ki15 | Ki16 |
|---|---|---|---|---|---|---|---|---|---|---|---|---|---|---|---|---|---|
| Ki1 | Pearson Correlation | 1 | .237 | .243 | .520** | .262 | .224 | .414** | .127 | .429** | .431** | .632** | .357* | .497** | .340* | .684** | .520** |
| | Sig. (2-tailed) | | .117 | .107 | .000 | .082 | .139 | .005 | .407 | .003 | .003 | .000 | .016 | .001 | .022 | .000 | .000 |
| | N | 45 | 45 | 45 | 45 | 45 | 45 | 45 | 45 | 45 | 45 | 45 | 45 | 45 | 45 | 45 | 45 |
| Ki2 | Pearson Correlation | .237 | 1 | .175 | .133 | .283 | .227 | .275 | .155 | .192 | .465** | .275 | .149 | -.086 | .411** | .084 | .225 |
| | Sig. (2-tailed) | .117 | | .251 | .383 | .060 | .133 | .067 | .310 | .208 | .001 | .067 | .328 | .575 | .005 | .584 | .136 |
| | N | 45 | 45 | 45 | 45 | 45 | 45 | 45 | 45 | 45 | 45 | 45 | 45 | 45 | 45 | 45 | 45 |
| Ki3 | Pearson Correlation | .243 | .175 | 1 | .055 | .303* | .055 | .431** | .306* | .241 | .216 | .508** | .260 | .181 | .417** | .356* | .385** |
| | Sig. (2-tailed) | .107 | .251 | | .719 | .043 | .717 | .003 | .041 | .111 | .154 | .000 | .085 | .234 | .004 | .017 | .009 |
| | N | 45 | 45 | 45 | 45 | 45 | 45 | 45 | 45 | 45 | 45 | 45 | 45 | 45 | 45 | 45 | 45 |
| Ki4 | Pearson Correlation | .520** | .133 | .055 | 1 | -.104 | .348* | .252 | .288 | .109 | .213 | .419** | .318* | .239 | .345* | .418** | .460** |
| | Sig. (2-tailed) | .000 | .383 | .719 | | .497 | .019 | .096 | .055 | .475 | .159 | .004 | .033 | .114 | .020 | .004 | .001 |
| | N | 45 | 45 | 45 | 45 | 45 | 45 | 45 | 45 | 45 | 45 | 45 | 45 | 45 | 45 | 45 | 45 |
| Ki5 | Pearson Correlation | .262 | .283 | .303* | -.104 | 1 | .101 | .139 | .017 | .407** | .209 | .052 | -.100 | .143 | -.020 | .116 | .270 |
| | Sig. (2-tailed) | .082 | .060 | .043 | .497 | | .510 | .362 | .914 | .006 | .168 | .733 | .513 | .350 | .898 | .447 | .073 |
| | N | 45 | 45 | 45 | 45 | 45 | 45 | 45 | 45 | 45 | 45 | 45 | 45 | 45 | 45 | 45 | 45 |
| Ki6 | Pearson Correlation | .224 | .227 | .055 | .348* | .101 | 1 | .323* | .348* | .135 | .025 | .092 | .227 | .060 | .092 | .171 | .101 |
| | Sig. (2-tailed) | .139 | .133 | .717 | .019 | .510 | | .031 | .019 | .377 | .870 | .547 | .133 | .694 | .550 | .263 | .510 |
| | N | 45 | 45 | 45 | 45 | 45 | 45 | 45 | 45 | 45 | 45 | 45 | 45 | 45 | 45 | 45 | 45 |
| Ki7 | Pearson Correlation | .414** | .275 | .431** | .252 | .139 | .323* | 1 | .350* | .400** | .301* | .609** | .017 | .050 | .477** | .366* | .252 |
| | Sig. (2-tailed) | .005 | .067 | .003 | .096 | .362 | .031 | | .018 | .006 | .045 | .000 | .911 | .744 | .001 | .013 | .096 |

| | | | | | | | | | | | | | | | | | |
|---|---|---|---|---|---|---|---|---|---|---|---|---|---|---|---|---|---|
| | N | 45 | 45 | 45 | 45 | 45 | 45 | 45 | 45 | 45 | 45 | 45 | 45 | 45 | 45 | 45 | 45 |
| ki8 | Pearson Correlation | .127 | .155 | .306* | .288 | .017 | .348* | .350* | 1 | .146 | .027 | .183 | .338* | .065 | .253 | .100 | .288 |
| | Sig. (2-tailed) | .407 | .310 | .041 | .055 | .914 | .019 | .018 | | .338 | .859 | .228 | .023 | .670 | .093 | .513 | .055 |
| | N | 45 | 45 | 45 | 45 | 45 | 45 | 45 | 45 | 45 | 45 | 45 | 45 | 45 | 45 | 45 | 45 |
| Ki9 | Pearson Correlation | .429** | .192 | .241 | .109 | .407** | .135 | .400** | .146 | 1 | .440** | .317* | .192 | .172 | .038 | .287 | .288 |
| | Sig. (2-tailed) | .003 | .208 | .111 | .475 | .006 | .377 | .006 | .338 | | .003 | .034 | .208 | .258 | .806 | .056 | .055 |
| | N | 45 | 45 | 45 | 45 | 45 | 45 | 45 | 45 | 45 | 45 | 45 | 45 | 45 | 45 | 45 | 45 |
| Ki10 | Pearson Correlation | .431** | .465** | .216 | .213 | .209 | .025 | .301* | .027 | .440** | 1 | .444** | .308* | .158 | .365* | .045 | .367* |
| | Sig. (2-tailed) | .003 | .001 | .154 | .159 | .168 | .870 | .045 | .859 | .003 | | .002 | .040 | .299 | .014 | .767 | .013 |
| | N | 45 | 45 | 45 | 45 | 45 | 45 | 45 | 45 | 45 | 45 | 45 | 45 | 45 | 45 | 45 | 45 |
| Ki11 | Pearson Correlation | .632** | .275 | .508** | .419** | .052 | .092 | .609** | .183 | .317* | .444** | 1 | .189 | .217 | .549** | .526** | .419** |
| | Sig. (2-tailed) | .000 | .067 | .000 | .004 | .733 | .547 | .000 | .228 | .034 | .002 | | .214 | .152 | .000 | .000 | .004 |
| | N | 45 | 45 | 45 | 45 | 45 | 45 | 45 | 45 | 45 | 45 | 45 | 45 | 45 | 45 | 45 | 45 |
| Ki12 | Pearson Correlation | .357* | .149 | .260 | .318* | -.100 | .227 | .017 | .338* | .192 | .308* | .189 | 1 | .098 | .173 | .434** | .410** |
| | Sig. (2-tailed) | .016 | .328 | .085 | .033 | .513 | .133 | .911 | .023 | .208 | .040 | .214 | | .522 | .256 | .003 | .005 |
| | N | 45 | 45 | 45 | 45 | 45 | 45 | 45 | 45 | 45 | 45 | 45 | 45 | 45 | 45 | 45 | 45 |
| Ki13 | Pearson Correlation | .497** | -.086 | .181 | .239 | .143 | .060 | .050 | .065 | .172 | .158 | .217 | .098 | 1 | .144 | .216 | .239 |
| | Sig. (2-tailed) | .001 | .575 | .234 | .114 | .350 | .694 | .744 | .670 | .258 | .299 | .152 | .522 | | .345 | .155 | .114 |
| | N | 45 | 45 | 45 | 45 | 45 | 45 | 45 | 45 | 45 | 45 | 45 | 45 | 45 | 45 | 45 | 45 |
| Ki14 | Pearson Correlation | .340* | .411** | .417** | .345* | -.020 | .092 | .477** | .253 | .038 | .365* | .549** | .173 | .144 | 1 | .277 | .345* |
| | Sig. (2-tailed) | .022 | .005 | .004 | .020 | .898 | .550 | .001 | .093 | .806 | .014 | .000 | .256 | .345 | | .066 | .020 |
| | N | 45 | 45 | 45 | 45 | 45 | 45 | 45 | 45 | 45 | 45 | 45 | 45 | 45 | 45 | 45 | 45 |
| Ki15 | Pearson Correlation | .684** | .084 | .356* | .418** | .116 | .171 | .366* | .100 | .287 | .045 | .526** | .434** | .216 | .277 | 1 | .504** |

| | | | | | | | | | | | | | | | | | |
|---|---|---|---|---|---|---|---|---|---|---|---|---|---|---|---|---|---|
| | Sig. (2-tailed) | .000 | .584 | .017 | .004 | .447 | .263 | .013 | .513 | .056 | .767 | .000 | .003 | .155 | .066 | | .000 |
| | N | 45 | 45 | 45 | 45 | 45 | 45 | 45 | 45 | 45 | 45 | 45 | 45 | 45 | 45 | 45 | 45 |
| Ki16 | Pearson Correlation | .520** | .225 | .385** | .460** | .270 | .101 | .252 | .288 | .288 | .367* | .419** | .410** | .239 | .345* | .504** | 1 |
| | Sig. (2-tailed) | .000 | .136 | .009 | .001 | .073 | .510 | .096 | .055 | .055 | .013 | .004 | .005 | .114 | .020 | .000 | |
| | N | 45 | 45 | 45 | 45 | 45 | 45 | 45 | 45 | 45 | 45 | 45 | 45 | 45 | 45 | 45 | 45 |
| ki17 | Pearson Correlation | .392** | -.015 | .392** | .379* | .108 | .436** | .574** | .473** | .456** | .106 | .419** | .156 | .177 | .145 | .494** | .379* |
| | Sig. (2-tailed) | .008 | .921 | .008 | .010 | .482 | .003 | .000 | .001 | .002 | .489 | .004 | .308 | .245 | .342 | .001 | .010 |
| | N | 45 | 45 | 45 | 45 | 45 | 45 | 45 | 45 | 45 | 45 | 45 | 45 | 45 | 45 | 45 | 45 |
| Ki18 | Pearson Correlation | .573** | .389** | .198 | .410** | .277 | .442** | .387** | .173 | .541** | .390** | .315* | .310* | .138 | .274 | .473** | .487** |
| | Sig. (2-tailed) | .000 | .008 | .193 | .005 | .066 | .002 | .009 | .255 | .000 | .008 | .035 | .038 | .366 | .069 | .001 | .001 |
| | N | 45 | 45 | 45 | 45 | 45 | 45 | 45 | 45 | 45 | 45 | 45 | 45 | 45 | 45 | 45 | 45 |
| Ki19 | Pearson Correlation | .428** | .321* | .475** | .229 | .273 | .086 | .562** | .408** | .266 | .178 | .488** | .078 | .279 | .530** | .325* | .150 |
| | Sig. (2-tailed) | .003 | .031 | .001 | .130 | .070 | .576 | .000 | .005 | .077 | .243 | .001 | .612 | .063 | .000 | .029 | .326 |
| | N | 45 | 45 | 45 | 45 | 45 | 45 | 45 | 45 | 45 | 45 | 45 | 45 | 45 | 45 | 45 | 45 |
| Ki20 | Pearson Correlation | .505** | .379* | .389** | .457** | .127 | .272 | .313* | .295* | .221 | .448** | .313* | .570** | .236 | .383** | .205 | .550** |
| | Sig. (2-tailed) | .000 | .010 | .008 | .002 | .405 | .071 | .036 | .049 | .145 | .002 | .036 | .000 | .119 | .009 | .176 | .000 |
| | N | 45 | 45 | 45 | 45 | 45 | 45 | 45 | 45 | 45 | 45 | 45 | 45 | 45 | 45 | 45 | 45 |
| Ki21 | Pearson Correlation | .426** | .169 | .510** | .322* | .117 | .059 | .456** | .424** | .136 | .038 | .456** | .169 | .283 | .470** | .537** | .231 |
| | Sig. (2-tailed) | .004 | .267 | .000 | .031 | .444 | .700 | .002 | .004 | .373 | .805 | .002 | .267 | .060 | .001 | .000 | .126 |
| | N | 45 | 45 | 45 | 45 | 45 | 45 | 45 | 45 | 45 | 45 | 45 | 45 | 45 | 45 | 45 | 45 |
| Ki22 | Pearson Correlation | .202 | .453** | .230 | .388** | .230 | .104 | .367* | .291 | .273 | .301* | .367* | -.006 | -.018 | .551** | .210 | .388** |
| | Sig. (2-tailed) | .183 | .002 | .128 | .008 | .129 | .497 | .013 | .052 | .069 | .044 | .013 | .968 | .907 | .000 | .166 | .008 |
| | N | 45 | 45 | 45 | 45 | 45 | 45 | 45 | 45 | 45 | 45 | 45 | 45 | 45 | 45 | 45 | 45 |

| | | | | | | | | | | | | | | | | | |
|---|---|---|---|---|---|---|---|---|---|---|---|---|---|---|---|---|---|
| Ki23 | Pearson Correlation | .377* | .152 | .408** | .371* | .287 | .383** | .302* | .214 | .154 | .127 | .396** | .256 | .141 | .354* | .551** | .371* |
| | Sig. (2-tailed) | .011 | .319 | .005 | .012 | .056 | .009 | .044 | .157 | .312 | .407 | .007 | .090 | .355 | .017 | .000 | .012 |
| | N | 45 | 45 | 45 | 45 | 45 | 45 | 45 | 45 | 45 | 45 | 45 | 45 | 45 | 45 | 45 | 45 |
| Ki24 | Pearson Correlation | .256 | .123 | .236 | .532** | .089 | .267 | .216 | .443** | -.017 | .015 | .216 | .439** | .179 | .303* | .448** | .532** |
| | Sig. (2-tailed) | .089 | .421 | .119 | .000 | .561 | .076 | .155 | .002 | .911 | .924 | .155 | .003 | .238 | .043 | .002 | .000 |
| | N | 45 | 45 | 45 | 45 | 45 | 45 | 45 | 45 | 45 | 45 | 45 | 45 | 45 | 45 | 45 | 45 |
| Ki25 | Pearson Correlation | .556** | .356* | .441** | .267 | .305* | .269 | .523** | .053 | .372* | .160 | .448** | .027 | .319* | .368* | .508** | .347* |
| | Sig. (2-tailed) | .000 | .016 | .002 | .076 | .041 | .074 | .000 | .729 | .012 | .295 | .002 | .858 | .032 | .013 | .000 | .019 |
| | N | 45 | 45 | 45 | 45 | 45 | 45 | 45 | 45 | 45 | 45 | 45 | 45 | 45 | 45 | 45 | 45 |
| Ki26 | Pearson Correlation | .371* | .462** | .431** | .341* | .248 | .320* | .463** | .430** | .183 | .338* | .386** | .208 | -.028 | .531** | .306* | .506** |
| | Sig. (2-tailed) | .012 | .001 | .003 | .022 | .100 | .032 | .001 | .003 | .229 | .023 | .009 | .171 | .858 | .000 | .041 | .000 |
| | N | 45 | 45 | 45 | 45 | 45 | 45 | 45 | 45 | 45 | 45 | 45 | 45 | 45 | 45 | 45 | 45 |
| Ki27 | Pearson Correlation | .566** | .268 | .307* | .172 | .103 | .279 | .576** | .399** | .380* | .334* | .486** | .268 | .237 | .409** | .461** | .268 |
| | Sig. (2-tailed) | .000 | .075 | .040 | .259 | .503 | .063 | .000 | .007 | .010 | .025 | .001 | .075 | .116 | .005 | .001 | .075 |
| | N | 45 | 45 | 45 | 45 | 45 | 45 | 45 | 45 | 45 | 45 | 45 | 45 | 45 | 45 | 45 | 45 |
| Ki28 | Pearson Correlation | .488** | .385** | .556** | .289 | .150 | .291 | .403** | .402** | .402** | .468** | .484** | .385** | .259 | .472** | .302* | .375* |
| | Sig. (2-tailed) | .001 | .009 | .000 | .054 | .326 | .053 | .006 | .006 | .006 | .001 | .001 | .009 | .086 | .001 | .044 | .011 |
| | N | 45 | 45 | 45 | 45 | 45 | 45 | 45 | 45 | 45 | 45 | 45 | 45 | 45 | 45 | 45 | 45 |
| totalkinerja | Pearson Correlation | .735** | .474** | .602** | .564** | .328* | .416** | .672** | .495** | .501** | .489** | .692** | .441** | .339* | .624** | .636** | .655** |
| | Sig. (2-tailed) | .000 | .001 | .000 | .000 | .028 | .004 | .000 | .001 | .000 | .001 | .000 | .002 | .023 | .000 | .000 | .000 |
| | N | 45 | 45 | 45 | 45 | 45 | 45 | 45 | 45 | 45 | 45 | 45 | 45 | 45 | 45 | 45 | 45 |

| ki17 | Ki18 | Ki19 | Ki20 | Ki21 | Ki22 | Ki23 | Ki24 | Ki25 | Ki26 | Ki27 | Ki28 | Total kinerja |
|---|---|---|---|---|---|---|---|---|---|---|---|---|

| | | | | | | | | | | | | |
|---|---|---|---|---|---|---|---|---|---|---|---|---|
| .392** | .573** | .428** | .505** | .426** | .202 | .377* | .256 | .556** | .371* | .566** | .488** | .735** |
| .008 | .000 | .003 | .000 | .004 | .183 | .011 | .089 | .000 | .012 | .000 | .001 | .000 |
| 45 | 45 | 45 | 45 | 45 | 45 | 45 | 45 | 45 | 45 | 45 | 45 | 45 |
| -.015 | .389** | .321* | .379* | .169 | .453** | .152 | .123 | .356* | .462** | .268 | .385** | .474** |
| .921 | .008 | .031 | .010 | .267 | .002 | .319 | .421 | .016 | .001 | .075 | .009 | .001 |
| 45 | 45 | 45 | 45 | 45 | 45 | 45 | 45 | 45 | 45 | 45 | 45 | 45 |
| .392** | .198 | .475** | .389** | .510** | .230 | .408** | .236 | .441** | .431** | .307* | .556** | .602** |
| .008 | .193 | .001 | .008 | .000 | .128 | .005 | .119 | .002 | .003 | .040 | .000 | .000 |
| 45 | 45 | 45 | 45 | 45 | 45 | 45 | 45 | 45 | 45 | 45 | 45 | 45 |
| .379* | .410** | .229 | .457** | .322* | .388** | .371* | .532** | .267 | .341* | .172 | .289 | .564** |
| .010 | .005 | .130 | .002 | .031 | .008 | .012 | .000 | .076 | .022 | .259 | .054 | .000 |
| 45 | 45 | 45 | 45 | 45 | 45 | 45 | 45 | 45 | 45 | 45 | 45 | 45 |
| .108 | .277 | .273 | .127 | .117 | .230 | .287 | .089 | .305* | .248 | .103 | .150 | .328* |
| .482 | .066 | .070 | .405 | .444 | .129 | .056 | .561 | .041 | .100 | .503 | .326 | .028 |
| 45 | 45 | 45 | 45 | 45 | 45 | 45 | 45 | 45 | 45 | 45 | 45 | 45 |
| .436** | .442** | .086 | .272 | .059 | .104 | .383** | .267 | .269 | .320* | .279 | .291 | .416** |
| .003 | .002 | .576 | .071 | .700 | .497 | .009 | .076 | .074 | .032 | .063 | .053 | .004 |
| 45 | 45 | 45 | 45 | 45 | 45 | 45 | 45 | 45 | 45 | 45 | 45 | 45 |
| .574** | .387** | .562** | .313* | .456** | .367* | .302* | .216 | .523** | .463** | .576** | .403** | .672** |
| .000 | .009 | .000 | .036 | .002 | .013 | .044 | .155 | .000 | .001 | .000 | .006 | .000 |
| 45 | 45 | 45 | 45 | 45 | 45 | 45 | 45 | 45 | 45 | 45 | 45 | 45 |
| .473** | .173 | .408** | .295* | .424** | .291 | .214 | .443** | .053 | .430** | .399** | .402** | .495** |
| .001 | .255 | .005 | .049 | .004 | .052 | .157 | .002 | .729 | .003 | .007 | .006 | .001 |

| | | | | | | | | | | | | |
|---|---|---|---|---|---|---|---|---|---|---|---|---|
| 45 | 45 | 45 | 45 | 45 | 45 | 45 | 45 | 45 | 45 | 45 | 45 | 45 |
| .456** | .541** | .266 | .221 | .136 | .273 | .154 | -.017 | .372* | .183 | .380* | .402** | .501** |
| .002 | .000 | .077 | .145 | .373 | .069 | .312 | .911 | .012 | .229 | .010 | .006 | .000 |
| 45 | 45 | 45 | 45 | 45 | 45 | 45 | 45 | 45 | 45 | 45 | 45 | 45 |
| .106 | .390** | .178 | .448** | .038 | .301* | .127 | .015 | .160 | .338* | .334* | .468** | .489** |
| .489 | .008 | .243 | .002 | .805 | .044 | .407 | .924 | .295 | .023 | .025 | .001 | .001 |
| 45 | 45 | 45 | 45 | 45 | 45 | 45 | 45 | 45 | 45 | 45 | 45 | 45 |
| .419** | .315* | .488** | .313* | .456** | .367* | .396** | .216 | .448** | .386** | .486** | .484** | .692** |
| .004 | .035 | .001 | .036 | .002 | .013 | .007 | .155 | .002 | .009 | .001 | .001 | .000 |
| 45 | 45 | 45 | 45 | 45 | 45 | 45 | 45 | 45 | 45 | 45 | 45 | 45 |
| .156 | .310* | .078 | .570** | .169 | -.006 | .256 | .439** | .027 | .208 | .268 | .385** | .441** |
| .308 | .038 | .612 | .000 | .267 | .968 | .090 | .003 | .858 | .171 | .075 | .009 | .002 |
| 45 | 45 | 45 | 45 | 45 | 45 | 45 | 45 | 45 | 45 | 45 | 45 | 45 |
| .177 | .138 | .279 | .236 | .283 | -.018 | .141 | .179 | .319* | -.028 | .237 | .259 | .339* |
| .245 | .366 | .063 | .119 | .060 | .907 | .355 | .238 | .032 | .858 | .116 | .086 | .023 |
| 45 | 45 | 45 | 45 | 45 | 45 | 45 | 45 | 45 | 45 | 45 | 45 | 45 |
| .145 | .274 | .530** | .383** | .470** | .551** | .354* | .303* | .368* | .531** | .409** | .472** | .624** |
| .342 | .069 | .000 | .009 | .001 | .000 | .017 | .043 | .013 | .000 | .005 | .001 | .000 |
| 45 | 45 | 45 | 45 | 45 | 45 | 45 | 45 | 45 | 45 | 45 | 45 | 45 |
| .494** | .473** | .325* | .205 | .537** | .210 | .551** | .448** | .508** | .306* | .461** | .302* | .636** |
| .001 | .001 | .029 | .176 | .000 | .166 | .000 | .002 | .000 | .041 | .001 | .044 | .000 |
| 45 | 45 | 45 | 45 | 45 | 45 | 45 | 45 | 45 | 45 | 45 | 45 | 45 |
| .379* | .487** | .150 | .550** | .231 | .388** | .371* | .532** | .347* | .506** | .268 | .375* | .655** |

| | | | | | | | | | | | | |
|---|---|---|---|---|---|---|---|---|---|---|---|---|
| .010 | .001 | .326 | .000 | .126 | .008 | .012 | .000 | .019 | .000 | .075 | .011 | .000 |
| 45 | 45 | 45 | 45 | 45 | 45 | 45 | 45 | 45 | 45 | 45 | 45 | 45 |
| 1 | .418** | .311* | .280 | .417** | .238 | .555** | .389** | .495** | .426** | .544** | .454** | .654** |
| | .004 | .037 | .062 | .004 | .116 | .000 | .008 | .001 | .004 | .000 | .002 | .000 |
| 45 | 45 | 45 | 45 | 45 | 45 | 45 | 45 | 45 | 45 | 45 | 45 | 45 |
| .418** | 1 | .099 | .357* | .067 | .475** | .311* | .242 | .343* | .378* | .374* | .444** | .634** |
| .004 | | .516 | .016 | .661 | .001 | .037 | .109 | .021 | .011 | .011 | .002 | .000 |
| 45 | 45 | 45 | 45 | 45 | 45 | 45 | 45 | 45 | 45 | 45 | 45 | 45 |
| .311* | .099 | 1 | .273 | .658** | .274 | .244 | .144 | .542** | .430** | .513** | .432** | .618** |
| .037 | .516 | | .070 | .000 | .069 | .107 | .347 | .000 | .003 | .000 | .003 | .000 |
| 45 | 45 | 45 | 45 | 45 | 45 | 45 | 45 | 45 | 45 | 45 | 45 | 45 |
| .280 | .357* | .273 | 1 | .305* | .230 | .182 | .409** | .472** | .506** | .303* | .420** | .640** |
| .062 | .016 | .070 | | .042 | .129 | .232 | .005 | .001 | .000 | .043 | .004 | .000 |
| 45 | 45 | 45 | 45 | 45 | 45 | 45 | 45 | 45 | 45 | 45 | 45 | 45 |
| .417** | .067 | .658** | .305* | 1 | .349* | .298* | .345* | .538** | .463** | .495** | .319* | .620** |
| .004 | .661 | .000 | .042 | | .019 | .046 | .020 | .000 | .001 | .001 | .032 | .000 |
| 45 | 45 | 45 | 45 | 45 | 45 | 45 | 45 | 45 | 45 | 45 | 45 | 45 |
| .238 | .475** | .274 | .230 | .349* | 1 | .262 | .359* | .240 | .358* | .244 | .259 | .536** |
| .116 | .001 | .069 | .129 | .019 | | .082 | .016 | .113 | .016 | .107 | .086 | .000 |
| 45 | 45 | 45 | 45 | 45 | 45 | 45 | 45 | 45 | 45 | 45 | 45 | 45 |
| .555** | .311* | .244 | .182 | .298* | .262 | 1 | .462** | .360* | .434** | .355* | .487** | .601** |
| .000 | .037 | .107 | .232 | .046 | .082 | | .001 | .015 | .003 | .017 | .001 | .000 |
| 45 | 45 | 45 | 45 | 45 | 45 | 45 | 45 | 45 | 45 | 45 | 45 | 45 |

| | | | | | | | | | | | | |
|---|---|---|---|---|---|---|---|---|---|---|---|---|
| .389** | .242 | .144 | .409** | .345* | .359* | .462** | 1 | .183 | .347* | .267 | .124 | .527** |
| .008 | .109 | .347 | .005 | .020 | .016 | .001 | | .228 | .019 | .076 | .418 | .000 |
| 45 | 45 | 45 | 45 | 45 | 45 | 45 | 45 | 45 | 45 | 45 | 45 | 45 |
| .495** | .343* | .542** | .472** | .538** | .240 | .360* | .183 | 1 | .394** | .373* | .309* | .652** |
| .001 | .021 | .000 | .001 | .000 | .113 | .015 | .228 | | .007 | .012 | .039 | .000 |
| 45 | 45 | 45 | 45 | 45 | 45 | 45 | 45 | 45 | 45 | 45 | 45 | 45 |
| .426** | .378* | .430** | .506** | .463** | .358* | .434** | .347* | .394** | 1 | .603** | .425** | .697** |
| .004 | .011 | .003 | .000 | .001 | .016 | .003 | .019 | .007 | | .000 | .004 | .000 |
| 45 | 45 | 45 | 45 | 45 | 45 | 45 | 45 | 45 | 45 | 45 | 45 | 45 |
| .544** | .374* | .513** | .303* | .495** | .244 | .355* | .267 | .373* | .603** | 1 | .496** | .681** |
| .000 | .011 | .000 | .043 | .001 | .107 | .017 | .076 | .012 | .000 | | .001 | .000 |
| 45 | 45 | 45 | 45 | 45 | 45 | 45 | 45 | 45 | 45 | 45 | 45 | 45 |
| .454** | .444** | .432** | .420** | .319* | .259 | .487** | .124 | .309* | .425** | .496** | 1 | .694** |
| .002 | .002 | .003 | .004 | .032 | .086 | .001 | .418 | .039 | .004 | .001 | | .000 |
| 45 | 45 | 45 | 45 | 45 | 45 | 45 | 45 | 45 | 45 | 45 | 45 | 45 |
| .654** | .634** | .618** | .640** | .620** | .536** | .601** | .527** | .652** | .697** | .681** | .694** | 1 |
| .000 | .000 | .000 | .000 | .000 | .000 | .000 | .000 | .000 | .000 | .000 | .000 | |
| 45 | 45 | 45 | 45 | 45 | 45 | 45 | 45 | 45 | 45 | 45 | 45 | 45 |

Lampiran 7 Hasil Uji Reliabilitas Instrumen

Variabel seleksi terbuka

**Case Processing Summary**

| | | N | % |
|---|---|---|---|
| Cases | Valid | 45 | 100.0 |
| | Excluded[a] | 0 | .0 |
| | Total | 45 | 100.0 |

a. Listwise deletion based on all variables in the procedure.

| Reliability Statistics | |
|---|---|
| Cronbach's Alpha | N of Items |
| .939 | 26 |

Variabel Kepuasan Kerja

| Reliability Statistics | |
|---|---|
| Cronbach's Alpha | N of Items |
| .938 | 22 |

Variabel Kepemimpinan Transformasional

| Reliability Statistics | |
|---|---|
| Cronbach's Alpha | N of Items |
| .969 | 35 |

Variabel Motivasi Kerja

| Reliability Statistics | |
|---|---|
| Cronbach's Alpha | N of Items |
| .937 | 29 |

Variabel Kinerja

| Reliability Statistics | |
|---|---|
| Cronbach's Alpha | N of Items |
| .926 | 28 |

Lampiran 8 Hasil output SEM PLS

MODEL ESTIMASI

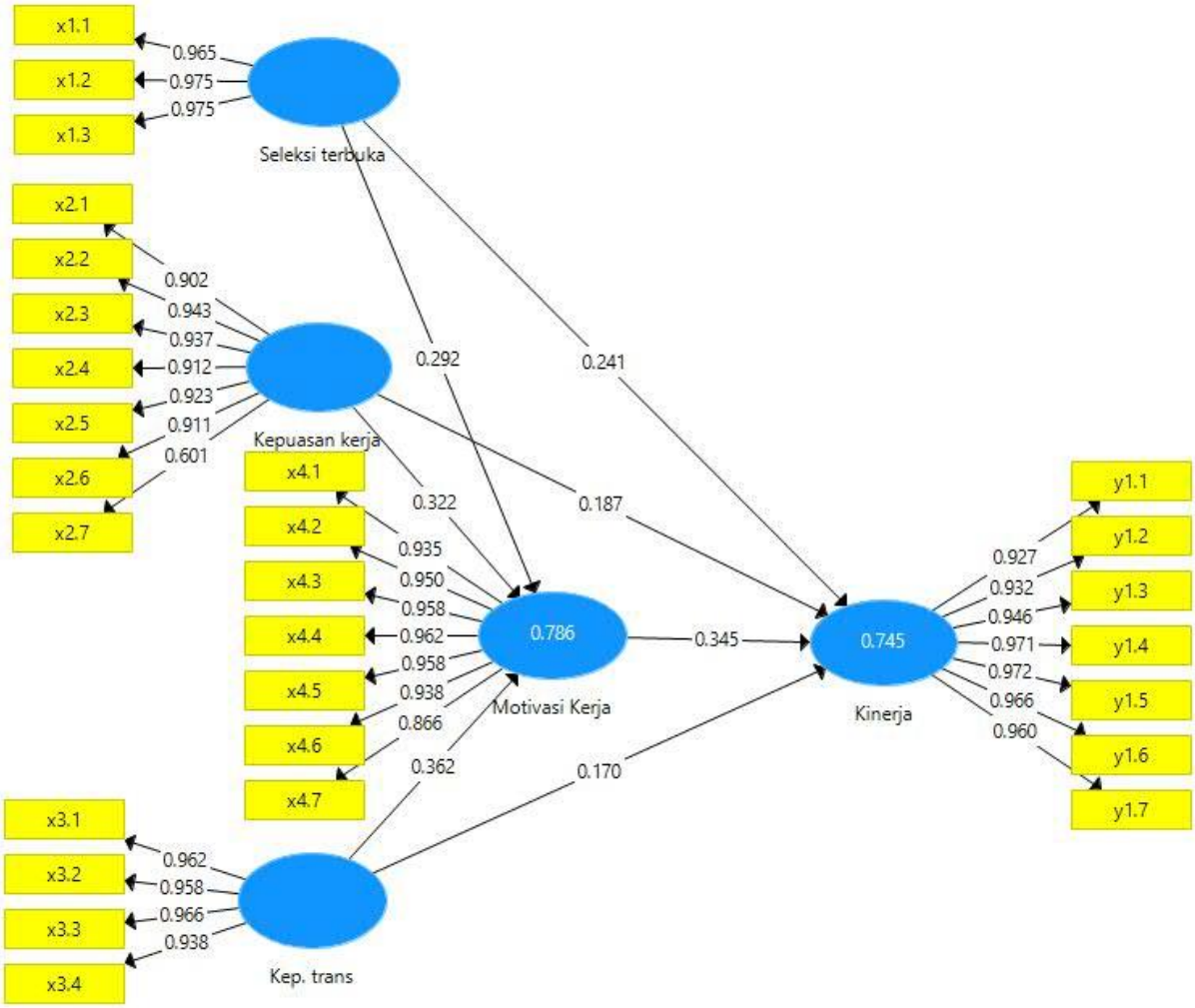


Outer Loadings

| | Kep. trans | Kepuasan kerja | Kinerja | Motivasi Kerja | Seleksi terbuka |
|---|---|---|---|---|---|
| x1.1 | | | | | 0.965 |
| x1.2 | | | | | 0.975 |
| x1.3 | | | | | 0.975 |
| x2.1 | | 0.902 | | | |
| x2.2 | | 0.943 | | | |
| x2.3 | | 0.937 | | | |
| x2.4 | | 0.912 | | | |
| x2.5 | | 0.923 | | | |
| x2.6 | | 0.911 | | | |
| x2.7 | | 0.601 | | | |

| | | | | | |
|---|---|---|---|---|---|
| x3.1 | 0.962 | | | | |
| x3.2 | 0.958 | | | | |
| x3.3 | 0.966 | | | | |
| x3.4 | 0.938 | | | | |
| x4.1 | | | | 0.935 | |
| x4.2 | | | | 0.950 | |
| x4.3 | | | | 0.958 | |
| x4.4 | | | | 0.962 | |
| x4.5 | | | | 0.958 | |
| x4.6 | | | | 0.938 | |
| x4.7 | | | | 0.866 | |
| y1.1 | | | 0.927 | | |
| y1.2 | | | 0.932 | | |
| y1.3 | | | 0.946 | | |
| y1.4 | | | 0.971 | | |
| y1.5 | | | 0.972 | | |
| y1.6 | | | 0.966 | | |
| y1.7 | | | 0.960 | | |

Outer Weights

| | Kep. trans | Kepuasan kerja | Kinerja | Motivasi Kerja | Seleksi terbuka |
|---|---|---|---|---|---|
| x1.1 | | | | | 0.348 |
| x1.2 | | | | | 0.336 |
| x1.3 | | | | | 0.345 |
| x2.1 | | 0.169 | | | |
| x2.2 | | 0.172 | | | |
| x2.3 | | 0.172 | | | |
| x2.4 | | 0.160 | | | |
| x2.5 | | 0.171 | | | |
| x2.6 | | 0.171 | | | |
| x2.7 | | 0.107 | | | |
| x3.1 | 0.268 | | | | |
| x3.2 | 0.260 | | | | |
| x3.3 | 0.260 | | | | |
| x3.4 | 0.259 | | | | |
| x4.1 | | | | 0.149 | |
| x4.2 | | | | 0.158 | |
| x4.3 | | | | 0.154 | |
| x4.4 | | | | 0.157 | |
| x4.5 | | | | 0.153 | |
| x4.6 | | | | 0.152 | |
| x4.7 | | | | 0.143 | |
| y1.1 | | | 0.146 | | |
| y1.2 | | | 0.151 | | |
| y1.3 | | | 0.150 | | |
| y1.4 | | | 0.150 | | |

| | | | | | |
|---|---|---|---|---|---|
| y1.5 | | | 0.149 | | |
| y1.6 | | | 0.154 | | |
| y1.7 | | | 0.148 | | |

Latent Variable
Latent Variable Correlations

| | Kep. trans | Kepuasan kerja | Kinerja | Motivasi Kerja | Seleksi terbuka |
|---|---|---|---|---|---|
| Kep. trans | 1.000 | 0.717 | 0.758 | 0.807 | 0.733 |
| Kepuasan kerja | 0.717 | 1.000 | 0.770 | 0.805 | 0.765 |
| Kinerja | 0.758 | 0.770 | 1.000 | 0.825 | 0.785 |
| Motivasi Kerja | 0.807 | 0.805 | 0.825 | 1.000 | 0.804 |
| Seleksi terbuka | 0.733 | 0.765 | 0.785 | 0.804 | 1.000 |

Quality Criteria

R Square

| | R Square | R Square Adjusted |
|---|---|---|
| Kinerja | 0.745 | 0.738 |
| Motivasi Kerja | 0.786 | 0.782 |

f Square

| | Kep. trans | Kepuasan kerja | Kinerja | Motivasi Kerja | Seleksi terbuka |
|---|---|---|---|---|---|
| Kep. trans | | | 0.036 | 0.247 | |
| Kepuasan kerja | | | 0.042 | 0.176 | |
| Kinerja | | | | | |
| Motivasi Kerja | | | 0.100 | | |
| Seleksi terbuka | | | 0.069 | 0.137 | |

Construct Reliability and Validity

| | Cronbach's Alpha | rho_A | Composite Reliability | Average Variance Extracted (AVE) |
|---|---|---|---|---|
| Kep. trans | 0.968 | 0.969 | 0.977 | 0.914 |
| Kepuasan kerja | 0.950 | 0.962 | 0.961 | 0.779 |
| Kinerja | 0.983 | 0.983 | 0.986 | 0.909 |
| Motivasi Kerja | 0.977 | 0.978 | 0.981 | 0.881 |
| Seleksi terbuka | 0.970 | 0.971 | 0.981 | 0.944 |

Discriminant Validity

Fornell-Larcker Criterion

| | Kep. trans | Kepuasan kerja | Kinerja | Motivasi Kerja | Seleksi terbuka |
|---|---|---|---|---|---|
| Kep. trans | 0.956 | | | | |
| Kepuasan kerja | 0.717 | 0.883 | | | |
| Kinerja | 0.758 | 0.770 | 0.953 | | |
| Motivasi Kerja | 0.807 | 0.805 | 0.825 | 0.939 | |
| Seleksi terbuka | 0.733 | 0.765 | 0.785 | 0.804 | 0.972 |

Cross Loadings

| | Kep. trans | Kepuasan kerja | Kinerja | Motivasi Kerja | Seleksi terbuka |
|---|---|---|---|---|---|
| x1.1 | 0.726 | 0.719 | 0.794 | 0.770 | 0.965 |
| x1.2 | 0.696 | 0.748 | 0.738 | 0.774 | 0.975 |
| x1.3 | 0.714 | 0.762 | 0.755 | 0.798 | 0.975 |
| x2.1 | 0.640 | 0.902 | 0.728 | 0.721 | 0.746 |
| x2.2 | 0.652 | 0.943 | 0.734 | 0.745 | 0.716 |
| x2.3 | 0.693 | 0.937 | 0.737 | 0.743 | 0.730 |
| x2.4 | 0.614 | 0.912 | 0.653 | 0.718 | 0.679 |
| x2.5 | 0.670 | 0.923 | 0.710 | 0.759 | 0.726 |
| x2.6 | 0.656 | 0.911 | 0.718 | 0.753 | 0.692 |
| x2.7 | 0.488 | 0.601 | 0.415 | 0.499 | 0.359 |
| x3.1 | 0.962 | 0.684 | 0.765 | 0.769 | 0.716 |
| x3.2 | 0.958 | 0.670 | 0.748 | 0.738 | 0.684 |
| x3.3 | 0.966 | 0.696 | 0.709 | 0.775 | 0.701 |
| x3.4 | 0.938 | 0.693 | 0.675 | 0.803 | 0.703 |
| x4.1 | 0.753 | 0.738 | 0.754 | 0.935 | 0.746 |
| x4.2 | 0.785 | 0.788 | 0.809 | 0.950 | 0.750 |
| x4.3 | 0.790 | 0.753 | 0.776 | 0.958 | 0.761 |
| x4.4 | 0.773 | 0.795 | 0.794 | 0.962 | 0.782 |
| x4.5 | 0.762 | 0.776 | 0.755 | 0.958 | 0.789 |
| x4.6 | 0.714 | 0.752 | 0.791 | 0.938 | 0.766 |
| x4.7 | 0.724 | 0.679 | 0.738 | 0.866 | 0.682 |
| y1.1 | 0.697 | 0.703 | 0.927 | 0.769 | 0.745 |
| y1.2 | 0.719 | 0.744 | 0.932 | 0.786 | 0.768 |
| y1.3 | 0.745 | 0.744 | 0.946 | 0.795 | 0.722 |
| y1.4 | 0.745 | 0.729 | 0.971 | 0.784 | 0.732 |
| y1.5 | 0.718 | 0.727 | 0.972 | 0.781 | 0.750 |
| y1.6 | 0.730 | 0.770 | 0.966 | 0.810 | 0.770 |
| y1.7 | 0.703 | 0.716 | 0.960 | 0.779 | 0.747 |

Heterotrait-Monotrait Ratio (HTMT)

| | Kep. trans | Kepuasan kerja | Kinerja | Motivasi Kerja | Seleksi terbuka |
|---|---|---|---|---|---|
| Kep. trans | | | | | |
| Kepuasan kerja | 0.750 | | | | |
| Kinerja | 0.776 | 0.792 | | | |
| Motivasi Kerja | 0.830 | 0.835 | 0.842 | | |
| Seleksi terbuka | 0.756 | 0.789 | 0.803 | 0.825 | |

Collinearity Statistics (VIF)

Outer VIF Values

| | VIF |
|---|---|
| x1.1 | 6.613 |
| x1.2 | 9.531 |
| x1.3 | 9.407 |
| x2.1 | 5.032 |
| x2.2 | 8.823 |
| x2.3 | 7.661 |
| x2.4 | 4.602 |
| x2.5 | 5.833 |
| x2.6 | 4.465 |
| x2.7 | 1.414 |
| x3.1 | 11.088 |
| x3.2 | 11.163 |
| x3.3 | 9.950 |
| x3.4 | 6.767 |
| x4.1 | 7.000 |
| x4.2 | 8.216 |
| x4.3 | 9.965 |
| x4.4 | 11.469 |
| x4.5 | 13.184 |
| x4.6 | 8.802 |
| x4.7 | 3.237 |
| y1.1 | 6.314 |
| y1.2 | 6.686 |
| y1.3 | 7.866 |
| y1.4 | 16.126 |
| y1.5 | 14.792 |
| y1.6 | 14.168 |
| y1.7 | 11.042 |

Inner VIF

Values

| | Kep. trans | Kepuasan kerja | Kinerja | Motivasi Kerja | Seleksi terbuka |
|---|---|---|---|---|---|
| Kep. trans | | | 3.092 | 2.479 | |
| Kepuasan kerja | | | 3.245 | 2.760 | |
| Kinerja | | | | | |
| Motivasi Kerja | | | 4.672 | | |
| Seleksi terbuka | | | 3.297 | 2.900 | |

MODEL BOOTSTRAPPING

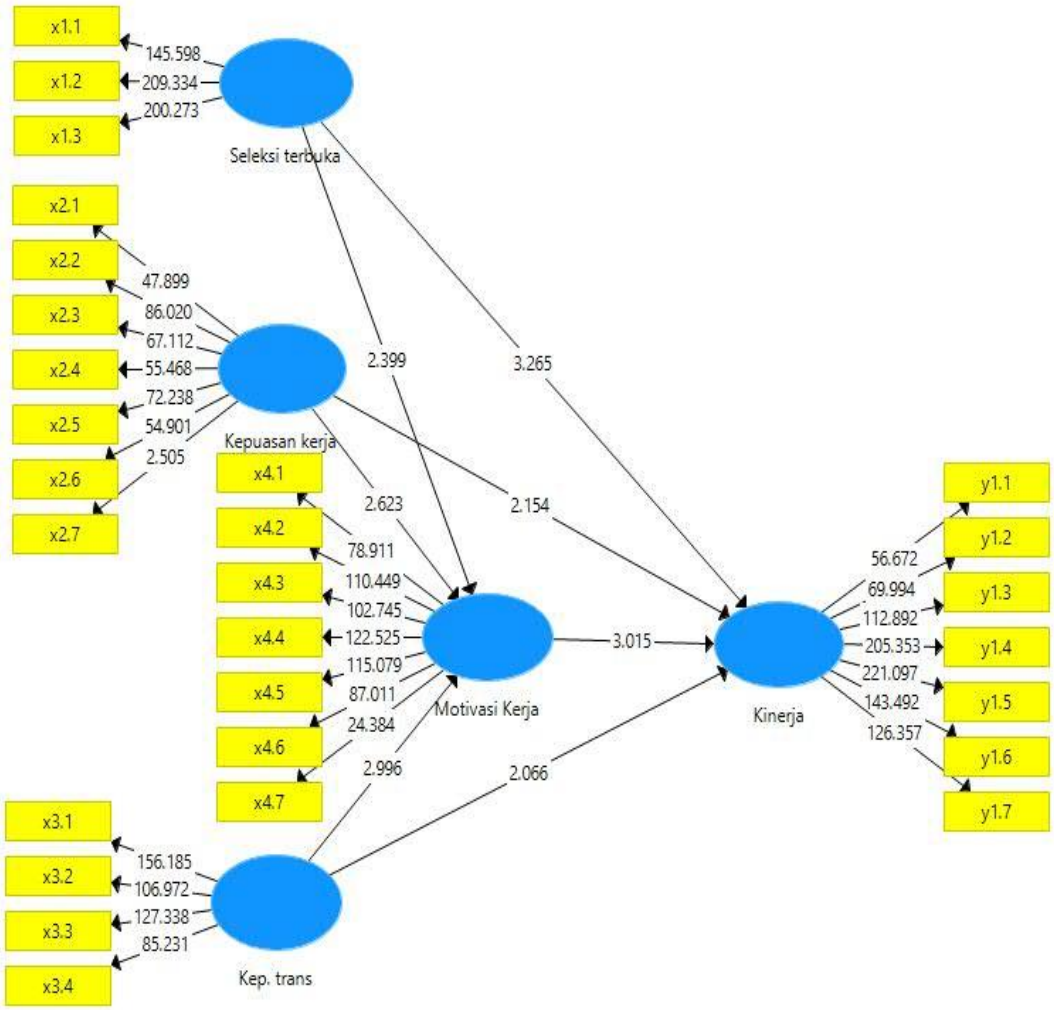


Path Coefficients Mean, STDEV, T-Values, P-Values

| | Original Sample (O) | Sample Mean (M) | Standard Deviation (STDEV) | T Statistics (\|O/STDEV\|) | P Values |
|---|---|---|---|---|---|
| Kep. trans -> Kinerja | 0.170 | 0.180 | 0.082 | 2.066 | 0.039 |
| Kep. trans -> Motivasi Kerja | 0.362 | 0.371 | 0.121 | 2.996 | 0.003 |
| Kepuasan kerja -> Kinerja | 0.187 | 0.183 | 0.087 | 2.154 | 0.032 |
| Kepuasan kerja -> Motivasi Kerja | 0.322 | 0.302 | 0.123 | 2.623 | 0.009 |
| Motivasi Kerja -> Kinerja | 0.345 | 0.334 | 0.114 | 3.015 | 0.003 |
| Seleksi terbuka -> Kinerja | 0.241 | 0.245 | 0.074 | 3.265 | 0.001 |
| Seleksi terbuka -> Motivasi Kerja | 0.292 | 0.303 | 0.122 | 2.399 | 0.017 |

Total Indirect Effects

Mean, STDEV, T-Values, P-Values

| | Original Sample (O) | Sample Mean (M) | Standard Deviation (STDEV) | T Statistics (\|O/STDEV\|) | P Values |
|---|---|---|---|---|---|
| Kep. trans -> Kinerja | 0.125 | 0.124 | 0.060 | 2.069 | 0.039 |
| Kep. trans -> Motivasi Kerja | | | | | |
| Kepuasan kerja -> Kinerja | 0.111 | 0.104 | 0.059 | 1.882 | 0.060 |
| Kepuasan kerja -> Motivasi Kerja | | | | | |
| Motivasi Kerja -> Kinerja | | | | | |
| Seleksi terbuka -> Kinerja | 0.101 | 0.098 | 0.049 | 2.058 | 0.040 |
| Seleksi terbuka -> Motivasi Kerja | | | | | |

Specific Indirect Effects

Mean, STDEV, T-Values, P-Values

| | Original Sample (O) | Sample Mean (M) | Standard Deviation (STDEV) | T Statistics (\|O/STDEV\|) | P Values |
|---|---|---|---|---|---|
| Kep. trans -> Motivasi Kerja -> Kinerja | 0.125 | 0.124 | 0.060 | 2.069 | 0.039 |
| Kepuasan kerja -> Motivasi Kerja -> Kinerja | 0.111 | 0.104 | 0.059 | 1.882 | 0.060 |
| Seleksi terbuka -> Motivasi Kerja -> Kinerja | 0.101 | 0.098 | 0.049 | 2.058 | 0.040 |

Total Effects

Mean, STDEV, T-Values, P-Values

| | Original Sample (O) | Sample Mean (M) | Standard Deviation (STDEV) | T Statistics (\|O/STDEV\|) | P Values |
|---|---|---|---|---|---|
| Kep. trans -> Kinerja | 0.294 | 0.304 | 0.096 | 3.076 | 0.002 |
| Kep. trans -> Motivasi Kerja | 0.362 | 0.371 | 0.121 | 2.996 | 0.003 |
| Kepuasan kerja -> Kinerja | 0.298 | 0.287 | 0.086 | 3.440 | 0.001 |
| Kepuasan kerja -> Motivasi Kerja | 0.322 | 0.302 | 0.123 | 2.623 | 0.009 |
| Motivasi Kerja -> Kinerja | 0.345 | 0.334 | 0.114 | 3.015 | 0.003 |
| Seleksi terbuka -> | 0.341 | 0.343 | 0.088 | 3.858 | 0.000 |

| | | | | | |
|---|---|---|---|---|---|
| Kinerja | | | | | |
| Seleksi terbuka -> Motivasi Kerja | 0.292 | 0.303 | 0.122 | 2.399 | 0.017 |

Outer Loadings

Mean, STDEV, T-Values, P-Values

| | Original Sample (O) | Sample Mean (M) | Standard Deviation (STDEV) | T Statistics (\|O/STDEV\|) | P Values |
|---|---|---|---|---|---|
| x1.1 <- Seleksi terbuka | 0.965 | 0.965 | 0.007 | 145.598 | 0.000 |
| x1.2 <- Seleksi terbuka | 0.975 | 0.974 | 0.005 | 209.334 | 0.000 |
| x1.3 <- Seleksi terbuka | 0.975 | 0.975 | 0.005 | 200.273 | 0.000 |
| x2.1 <- Kepuasan kerja | 0.902 | 0.902 | 0.019 | 47.899 | 0.000 |
| x2.2 <- Kepuasan kerja | 0.943 | 0.944 | 0.011 | 86.020 | 0.000 |
| x2.3 <- Kepuasan kerja | 0.937 | 0.937 | 0.014 | 67.112 | 0.000 |
| x2.4 <- Kepuasan kerja | 0.912 | 0.912 | 0.016 | 55.468 | 0.000 |
| x2.5 <- Kepuasan kerja | 0.923 | 0.924 | 0.013 | 72.238 | 0.000 |
| x2.6 <- Kepuasan kerja | 0.911 | 0.913 | 0.017 | 54.901 | 0.000 |
| x2.7 <- Kepuasan kerja | 0.601 | 0.637 | 0.240 | 2.505 | 0.013 |
| x3.1 <- Kep. trans | 0.962 | 0.961 | 0.006 | 156.185 | 0.000 |
| x3.2 <- Kep. trans | 0.958 | 0.957 | 0.009 | 106.972 | 0.000 |
| x3.3 <- Kep. trans | 0.966 | 0.965 | 0.008 | 127.338 | 0.000 |
| x3.4 <- Kep. trans | 0.938 | 0.937 | 0.011 | 85.231 | 0.000 |
| x4.1 <- Motivasi Kerja | 0.935 | 0.935 | 0.012 | 78.911 | 0.000 |
| x4.2 <- Motivasi Kerja | 0.950 | 0.950 | 0.009 | 110.449 | 0.000 |
| x4.3 <- Motivasi Kerja | 0.958 | 0.958 | 0.009 | 102.745 | 0.000 |
| x4.4 <- Motivasi Kerja | 0.962 | 0.962 | 0.008 | 122.525 | 0.000 |
| x4.5 <- Motivasi Kerja | 0.958 | 0.957 | 0.008 | 115.079 | 0.000 |
| x4.6 <- Motivasi Kerja | 0.938 | 0.937 | 0.011 | 87.011 | 0.000 |
| x4.7 <- Motivasi Kerja | 0.866 | 0.862 | 0.035 | 24.384 | 0.000 |

| | | | | | |
|---|---|---|---|---|---|
| y1.1 <- Kinerja | 0.927 | 0.925 | 0.016 | 56.672 | 0.000 |
| y1.2 <- Kinerja | 0.932 | 0.930 | 0.013 | 69.994 | 0.000 |
| y1.3 <- Kinerja | 0.946 | 0.946 | 0.008 | 112.892 | 0.000 |
| y1.4 <- Kinerja | 0.971 | 0.971 | 0.005 | 205.353 | 0.000 |
| y1.5 <- Kinerja | 0.972 | 0.972 | 0.004 | 221.097 | 0.000 |
| y1.6 <- Kinerja | 0.966 | 0.966 | 0.007 | 143.492 | 0.000 |
| y1.7 <- Kinerja | 0.960 | 0.960 | 0.008 | 126.357 | 0.000 |

Outer Weights

Mean, STDEV, T-Values, P-Values

| | Original Sample (O) | Sample Mean (M) | Standard Deviation (STDEV) | T Statistics (\|O/STDEV\|) | P Values |
|---|---|---|---|---|---|
| x1.1 <- Seleksi terbuka | 0.348 | 0.348 | 0.006 | 58.745 | 0.000 |
| x1.2 <- Seleksi terbuka | 0.336 | 0.336 | 0.004 | 87.507 | 0.000 |
| x1.3 <- Seleksi terbuka | 0.345 | 0.345 | 0.004 | 81.899 | 0.000 |
| x2.1 <- Kepuasan kerja | 0.169 | 0.166 | 0.010 | 16.314 | 0.000 |
| x2.2 <- Kepuasan kerja | 0.172 | 0.170 | 0.010 | 17.172 | 0.000 |
| x2.3 <- Kepuasan kerja | 0.172 | 0.170 | 0.010 | 17.345 | 0.000 |
| x2.4 <- Kepuasan kerja | 0.160 | 0.157 | 0.009 | 17.142 | 0.000 |
| x2.5 <- Kepuasan kerja | 0.171 | 0.169 | 0.009 | 18.112 | 0.000 |
| x2.6 <- Kepuasan kerja | 0.171 | 0.168 | 0.010 | 17.901 | 0.000 |
| x2.7 <- Kepuasan kerja | 0.107 | 0.111 | 0.030 | 3.500 | 0.001 |
| x3.1 <- Kep. trans | 0.268 | 0.268 | 0.005 | 56.242 | 0.000 |
| x3.2 <- Kep. trans | 0.260 | 0.260 | 0.005 | 52.840 | 0.000 |
| x3.3 <- Kep. trans | 0.260 | 0.259 | 0.004 | 59.176 | 0.000 |
| x3.4 <- Kep. trans | 0.259 | 0.259 | 0.006 | 45.659 | 0.000 |
| x4.1 <- Motivasi Kerja | 0.149 | 0.150 | 0.004 | 42.614 | 0.000 |
| x4.2 <- Motivasi Kerja | 0.158 | 0.158 | 0.004 | 44.822 | 0.000 |
| x4.3 <- Motivasi Kerja | 0.154 | 0.154 | 0.004 | 41.075 | 0.000 |
| x4.4 <- Motivasi Kerja | 0.157 | 0.157 | 0.003 | 46.029 | 0.000 |
| x4.5 <- Motivasi Kerja | 0.153 | 0.153 | 0.003 | 49.791 | 0.000 |

| | | | | | |
|---|---|---|---|---|---|
| x4.6 <- Motivasi Kerja | 0.152 | 0.153 | 0.004 | 38.367 | 0.000 |
| x4.7 <- Motivasi Kerja | 0.143 | 0.142 | 0.006 | 25.872 | 0.000 |
| y1.1 <- Kinerja | 0.146 | 0.146 | 0.003 | 48.534 | 0.000 |
| y1.2 <- Kinerja | 0.151 | 0.151 | 0.003 | 49.856 | 0.000 |
| y1.3 <- Kinerja | 0.150 | 0.150 | 0.002 | 60.299 | 0.000 |
| y1.4 <- Kinerja | 0.150 | 0.150 | 0.003 | 56.990 | 0.000 |
| y1.5 <- Kinerja | 0.149 | 0.150 | 0.002 | 65.733 | 0.000 |
| y1.6 <- Kinerja | 0.154 | 0.155 | 0.003 | 53.555 | 0.000 |
| y1.7 <- Kinerja | 0.148 | 0.148 | 0.003 | 58.277 | 0.000 |

Lampiran 9 Jumlah Sampel

| N | s | | | N | s | | | N | s | | |
|---|---|---|---|---|---|---|---|---|---|---|---|
| | 1% | 5% | 10% | | 1% | 5% | 10 % | | 1% | 5% | 10% |
| 10 | 10 | 10 | 10 | 280 | 197 | 155 | 138 | 2800 | 537 | 310 | 247 |
| 15 | 15 | 14 | 14 | 290 | 202 | 158 | 140 | 3000 | 543 | 312 | 248 |
| 20 | 19 | 19 | 19 | 300 | 207 | 161 | 143 | 3500 | 558 | 317 | 251 |
| 25 | 24 | 23 | 23 | 320 | 216 | 167 | 147 | 4000 | 569 | 320 | 254 |
| 30 | 29 | 28 | 27 | 340 | 225 | 172 | 151 | 4500 | 578 | 323 | 255 |
| 35 | 33 | 32 | 31 | 360 | 234 | 177 | 155 | 5000 | 586 | 326 | 257 |
| 40 | 38 | 36 | 35 | 380 | 242 | 182 | 158 | 6000 | 598 | 329 | 259 |
| 45 | 42 | 40 | 39 | 400 | 250 | 186 | 162 | 7000 | 606 | 332 | 261 |
| 50 | 47 | 44 | 42 | 420 | 257 | 191 | 165 | 8000 | 613 | 334 | 263 |
| 55 | 51 | 48 | 46 | 440 | 265 | 195 | 168 | 9000 | 618 | 335 | 263 |
| 60 | 55 | 51 | 49 | 460 | 272 | 198 | 171 | 10000 | 622 | 336 | 263 |
| 65 | 59 | 55 | 53 | 480 | 279 | 202 | 173 | 15000 | 635 | 340 | 266 |
| 70 | 63 | 58 | 56 | 500 | 285 | 205 | 176 | 20000 | 642 | 342 | 267 |
| 75 | 67 | 62 | 59 | 550 | 301 | 213 | 182 | 30000 | 649 | 344 | 268 |
| 80 | 71 | 65 | 62 | 600 | 315 | 221 | 187 | 40000 | 563 | 345 | 269 |
| 85 | 75 | 68 | 65 | 650 | 329 | 227 | 191 | 50000 | 655 | 346 | 269 |
| 90 | 79 | 72 | 68 | 700 | 341 | 233 | 195 | 75000 | 658 | 346 | 270 |
| 95 | 83 | 75 | 71 | 750 | 352 | 238 | 199 | 100000 | 659 | 347 | 270 |
| 100 | 87 | 78 | 73 | 800 | 363 | 243 | 202 | 150000 | 661 | 347 | 270 |
| 110 | 94 | 84 | 78 | 850 | 373 | 247 | 205 | 200000 | 661 | 347 | 270 |
| 120 | 102 | 89 | 83 | 900 | 382 | 251 | 208 | 250000 | 662 | 348 | 270 |
| 130 | 109 | 95 | 88 | 950 | 391 | 255 | 211 | 300000 | 662 | 348 | 270 |
| 140 | 116 | 100 | 92 | 1000 | 399 | 258 | 213 | 350000 | 662 | 348 | 270 |
| 150 | 122 | 105 | 97 | 1100 | 414 | 265 | 217 | 400000 | 662 | 348 | 270 |
| 160 | 129 | 110 | 101 | 1200 | 427 | 270 | 221 | 450000 | 663 | 348 | 270 |
| 170 | 135 | 114 | 105 | 1300 | 440 | 275 | 224 | 500000 | 663 | 348 | 270 |
| 180 | 142 | 119 | 108 | 1400 | 450 | 279 | 227 | 550000 | 663 | 348 | 270 |
| 190 | 148 | 123 | 112 | 1500 | 460 | 283 | 229 | 600000 | 663 | 348 | 270 |
| 200 | 154 | 127 | 115 | 1600 | 469 | 286 | 232 | 650000 | 663 | 348 | 270 |
| 210 | 160 | 131 | 118 | 1700 | 477 | 289 | 234 | 700000 | 663 | 348 | 270 |
| 220 | 165 | 135 | 122 | 1800 | 485 | 292 | 235 | 750000 | 663 | 348 | 270 |
| 230 | 171 | 139 | 125 | 1900 | 492 | 294 | 237 | 800000 | 663 | 348 | 271 |
| 240 | 176 | 142 | 127 | 2000 | 498 | 297 | 238 | 850000 | 663 | 348 | 271 |
| 250 | 182 | 146 | 130 | 2200 | 510 | 301 | 241 | 900000 | 663 | 348 | 271 |
| 260 | 187 | 149 | 133 | 2400 | 520 | 304 | 243 | 950000 | 663 | 348 | 271 |
| 270 | 192 | 152 | 135 | 2600 | 529 | 307 | 245 | 1000000 | 663 | 348 | 271 |
| | | | | | | | | ∞ | 664 | 349 | 272 |

Lampiran 10

| No | X 1.11 | X 1.12 | X 1.13 | X 1.14 | X 1.15 | X 1.16 | X 1.17 | X 1.18 | X 1.1 | X 1.21 | X 1.22 | X 1.23 | X 1.24 | X 1.25 | X 1.26 | X 1.27 | x1.2 | X 1.301 | X 1.302 | X 1.303 | X 1.304 | X 1.305 | X 1.306 | X 1.307 | X 1.308 | X 1.309 | X 1.310 | X 1.311 | X 1.3 | X 1 |
|---|---|---|---|---|---|---|---|---|---|---|---|---|---|---|---|---|---|---|---|---|---|---|---|---|---|---|---|---|---|---|
| 1 | 5 | 5 | 5 | 5 | 5 | 4 | 4 | 5 | 4.75 | 5 | 5 | 4 | 4 | 5 | 5 | 5 | 4.71 | 5 | 5 | 5 | 5 | 5 | 5 | 5 | 5 | 5 | 5 | 5 | 5.00 | 4.82 |
| 2 | 5 | 4 | 5 | 4 | 5 | 5 | 4 | 4 | 4.50 | 5 | 5 | 5 | 5 | 5 | 4 | 4 | 4.71 | 5 | 5 | 5 | 5 | 4 | 4 | 5 | 4 | 4 | 5 | 4 | 4.55 | 4.59 |
| 3 | 5 | 4 | 5 | 5 | 4 | 4 | 5 | 5 | 4.63 | 5 | 5 | 4 | 5 | 5 | 4 | 4 | 4.57 | 5 | 4 | 4 | 5 | 4 | 4 | 4 | 4 | 4 | 5 | 4 | 4.27 | 4.49 |
| 4 | 2 | 3 | 2 | 3 | 2 | 2 | 2 | 3 | 2.38 | 3 | 2 | 3 | 2 | 3 | 3 | 3 | 2.71 | 2 | 3 | 2 | 4 | 3 | 2 | 3 | 2 | 3 | 3 | 3 | 2.73 | 2.61 |
| 5 | 4 | 4 | 5 | 5 | 4 | 4 | 4 | 5 | 4.38 | 4 | 4 | 4 | 4 | 4 | 4 | 4 | 4.00 | 4 | 4 | 4 | 4 | 4 | 4 | 5 | 4 | 5 | 4 | 4 | 4.18 | 4.19 |
| 6 | 5 | 4 | 5 | 5 | 5 | 4 | 5 | 5 | 4.75 | 4 | 4 | 5 | 5 | 5 | 4 | 5 | 4.57 | 5 | 5 | 4 | 5 | 4 | 4 | 4 | 5 | 4 | 4 | 5 | 4.45 | 4.59 |
| 7 | 5 | 5 | 5 | 4 | 4 | 5 | 4 | 5 | 4.63 | 4 | 5 | 4 | 4 | 5 | 4 | 4 | 4.29 | 5 | 5 | 5 | 5 | 5 | 5 | 5 | 4 | 5 | 5 | 5 | 4.91 | 4.61 |
| 8 | 5 | 5 | 5 | 5 | 5 | 4 | 4 | 4 | 4.63 | 4 | 5 | 4 | 4 | 5 | 5 | 5 | 4.57 | 5 | 4 | 4 | 4 | 4 | 5 | 4 | 4 | 5 | 5 | 4 | 4.36 | 4.52 |
| 9 | 5 | 5 | 5 | 5 | 5 | 5 | 5 | 5 | 5.00 | 5 | 5 | 5 | 5 | 5 | 5 | 5 | 5.00 | 5 | 5 | 5 | 5 | 5 | 5 | 5 | 5 | 5 | 5 | 5 | 5.00 | 5.00 |
| 10 | 2 | 3 | 2 | 3 | 2 | 2 | 2 | 3 | 2.38 | 3 | 2 | 3 | 2 | 3 | 3 | 3 | 2.71 | 2 | 3 | 2 | 4 | 3 | 2 | 3 | 2 | 3 | 3 | 3 | 2.73 | 2.61 |
| 11 | 5 | 5 | 4 | 5 | 5 | 4 | 5 | 5 | 4.75 | 4 | 5 | 4 | 4 | 5 | 4 | 5 | 4.43 | 5 | 4 | 3 | 5 | 5 | 5 | 5 | 4 | 4 | 4 | 4 | 4.36 | 4.51 |
| 12 | 4 | 5 | 5 | 4 | 4 | 5 | 5 | 5 | 4.63 | 5 | 4 | 4 | 4 | 4 | 5 | 4 | 4.29 | 4 | 5 | 5 | 5 | 4 | 4 | 4 | 4 | 4 | 5 | 5 | 4.45 | 4.46 |
| 13 | 5 | 4 | 5 | 4 | 5 | 4 | 5 | 5 | 4.63 | 5 | 5 | 4 | 4 | 4 | 5 | 4 | 4.43 | 4 | 4 | 5 | 4 | 5 | 5 | 4 | 5 | 5 | 5 | 5 | 4.64 | 4.56 |
| 14 | 2 | 3 | 2 | 3 | 2 | 2 | 2 | 3 | 2.38 | 3 | 2 | 3 | 2 | 3 | 3 | 3 | 2.71 | 2 | 3 | 2 | 4 | 3 | 2 | 3 | 2 | 3 | 3 | 3 | 2.73 | 2.61 |
| 15 | 5 | 5 | 5 | 5 | 5 | 5 | 5 | 5 | 5.00 | 5 | 5 | 5 | 5 | 5 | 5 | 5 | 5.00 | 5 | 5 | 5 | 5 | 5 | 5 | 5 | 5 | 5 | 5 | 5 | 5.00 | 5.00 |
| 16 | 5 | 5 | 5 | 5 | 5 | 5 | 5 | 5 | 5.00 | 5 | 5 | 5 | 5 | 5 | 5 | 5 | 5.00 | 5 | 5 | 5 | 5 | 5 | 5 | 5 | 1 | 5 | 5 | 5 | 4.64 | 4.88 |
| 17 | 5 | 5 | 5 | 4 | 5 | 3 | 5 | 4 | 4.50 | 5 | 5 | 4 | 4 | 5 | 4 | 4 | 4.43 | 5 | 4 | 4 | 5 | 4 | 5 | 5 | 4 | 4 | 4 | 4 | 4.36 | 4.43 |
| 18 | 5 | 5 | 5 | 5 | 5 | 5 | 5 | 5 | 5.00 | 5 | 5 | 5 | 5 | 5 | 5 | 5 | 5.00 | 5 | 5 | 5 | 5 | 5 | 5 | 5 | 5 | 5 | 5 | 5 | 5.00 | 5.00 |
| 19 | 4 | 4 | 5 | 5 | 4 | 5 | 5 | 5 | 4.63 | 5 | 5 | 5 | 2 | 5 | 3 | 5 | 4.29 | 5 | 5 | 5 | 5 | 5 | 5 | 5 | 5 | 5 | 5 | 4 | 4.91 | 4.61 |
| 20 | 5 | 5 | 5 | 4 | 5 | 4 | 5 | 2 | 4.38 | 4 | 4 | 4 | 5 | 5 | 4 | 4 | 4.29 | 4 | 5 | 4 | 5 | 5 | 5 | 4 | 5 | 4 | 5 | 5 | 4.64 | 4.43 |
| 21 | 4 | 5 | 4 | 5 | 4 | 5 | 4 | 5 | 4.50 | 4 | 5 | 4 | 5 | 4 | 5 | 5 | 4.57 | 5 | 4 | 4 | 4 | 4 | 4 | 4 | 4 | 4 | 4 | 4 | 4.09 | 4.39 |
| 22 | 4 | 4 | 4 | 5 | 5 | 5 | 5 | 4 | 4.50 | 4 | 4 | 5 | 4 | 5 | 4 | 5 | 4.43 | 4 | 5 | 4 | 5 | 5 | 5 | 4 | 4 | 4 | 4 | 4 | 4.36 | 4.43 |
| 23 | 4 | 4 | 4 | 5 | 5 | 5 | 5 | 4 | 4.50 | 4 | 4 | 5 | 4 | 5 | 4 | 5 | 4.43 | 4 | 5 | 4 | 5 | 5 | 5 | 4 | 4 | 4 | 4 | 4 | 4.36 | 4.43 |
| 24 | 4 | 4 | 4 | 5 | 5 | 5 | 5 | 4 | 4.50 | 4 | 4 | 5 | 4 | 5 | 4 | 5 | 4.43 | 4 | 5 | 4 | 5 | 5 | 5 | 4 | 4 | 4 | 4 | 4 | 4.36 | 4.43 |
| 25 | 5 | 5 | 5 | 4 | 4 | 5 | 4 | 4 | 4.50 | 4 | 5 | 5 | 5 | 5 | 5 | 4 | 4.71 | 4 | 5 | 4 | 5 | 4 | 4 | 5 | 5 | 5 | 4 | 4 | 4.45 | 4.56 |
| 26 | 5 | 5 | 4 | 4 | 5 | 4 | 5 | 5 | 4.63 | 4 | 4 | 5 | 4 | 4 | 5 | 5 | 4.43 | 5 | 4 | 5 | 4 | 5 | 5 | 4 | 4 | 5 | 4 | 4 | 4.45 | 4.50 |
| 27 | 5 | 5 | 5 | 5 | 5 | 4 | 5 | 5 | 4.88 | 5 | 5 | 5 | 4 | 5 | 5 | 5 | 4.86 | 5 | 5 | 5 | 5 | 5 | 4 | 5 | 5 | 5 | 5 | 5 | 4.91 | 4.88 |

| | | | | | | | | | | | | | | | | | | | | | | | | | | | | | | |
|---|---|---|---|---|---|---|---|---|---|---|---|---|---|---|---|---|---|---|---|---|---|---|---|---|---|---|---|---|---|---|
| 28 | 5 | 5 | 5 | 5 | 5 | 5 | 4 | 5 | 4.88 | 5 | 5 | 5 | 5 | 5 | 4 | 4 | 4.71 | 4 | 5 | 4 | 5 | 5 | 5 | 5 | 4 | 5 | 5 | 4 | 4.64 | 4.74 |
| 29 | 5 | 4 | 3 | 5 | 3 | 5 | 5 | 5 | 4.38 | 5 | 4 | 4 | 5 | 5 | 4 | 4 | 4.43 | 4 | 4 | 4 | 5 | 4 | 5 | 4 | 4 | 4 | 4 | 4 | 4.18 | 4.33 |
| 30 | 5 | 4 | 5 | 5 | 5 | 5 | 5 | 5 | 4.88 | 4 | 5 | 5 | 5 | 5 | 5 | 5 | 4.86 | 5 | 4 | 4 | 5 | 5 | 5 | 5 | 4 | 5 | 4 | 5 | 4.64 | 4.79 |
| 31 | 5 | 5 | 5 | 5 | 5 | 4 | 5 | 5 | 4.88 | 5 | 4 | 5 | 5 | 5 | 5 | 5 | 4.86 | 4 | 5 | 4 | 5 | 5 | 5 | 5 | 4 | 4 | 5 | 5 | 4.64 | 4.79 |
| 32 | 4 | 4 | 5 | 5 | 5 | 4 | 4 | 5 | 4.50 | 4 | 5 | 4 | 5 | 4 | 5 | 4 | 4.43 | 4 | 4 | 4 | 4 | 4 | 4 | 4 | 4 | 5 | 4 | 5 | 4.18 | 4.37 |
| 33 | 3 | 4 | 3 | 4 | 3 | 3 | 4 | 3 | 3.38 | 4 | 3 | 4 | 3 | 4 | 3 | 4 | 3.57 | 3 | 3 | 4 | 4 | 4 | 4 | 3 | 3 | 3 | 4 | 4 | 3.55 | 3.50 |
| 34 | 5 | 4 | 5 | 5 | 5 | 5 | 5 | 5 | 4.88 | 5 | 5 | 5 | 5 | 5 | 4 | 4 | 4.71 | 4 | 4 | 5 | 5 | 5 | 4 | 5 | 4 | 4 | 5 | 4 | 4.45 | 4.68 |
| 35 | 5 | 5 | 5 | 5 | 5 | 5 | 5 | 5 | 5.00 | 5 | 5 | 5 | 5 | 5 | 5 | 5 | 5.00 | 5 | 5 | 5 | 5 | 5 | 5 | 5 | 5 | 5 | 5 | 5 | 5.00 | 5.00 |
| 36 | 5 | 5 | 5 | 5 | 5 | 5 | 5 | 5 | 5.00 | 5 | 5 | 5 | 5 | 5 | 5 | 5 | 5.00 | 5 | 5 | 5 | 5 | 5 | 5 | 5 | 5 | 5 | 5 | 5 | 5.00 | 5.00 |
| 37 | 4 | 5 | 5 | 5 | 5 | 5 | 4 | 5 | 4.75 | 5 | 5 | 5 | 4 | 5 | 4 | 5 | 4.71 | 5 | 5 | 5 | 4 | 5 | 5 | 4 | 5 | 4 | 5 | 5 | 4.73 | 4.73 |
| 38 | 4 | 4 | 4 | 4 | 4 | 4 | 4 | 4 | 4.00 | 4 | 4 | 4 | 4 | 4 | 4 | 4 | 4.00 | 4 | 4 | 5 | 4 | 4 | 4 | 4 | 3 | 4 | 4 | 4 | 4.00 | 4.00 |
| 39 | 5 | 5 | 5 | 5 | 5 | 5 | 5 | 5 | 5.00 | 5 | 5 | 5 | 5 | 5 | 5 | 4 | 4.86 | 4 | 5 | 5 | 5 | 5 | 5 | 5 | 5 | 5 | 5 | 5 | 4.91 | 4.92 |
| 40 | 4 | 4 | 4 | 5 | 5 | 5 | 4 | 5 | 4.50 | 5 | 5 | 5 | 5 | 5 | 5 | 5 | 5.00 | 5 | 4 | 4 | 5 | 5 | 5 | 5 | 4 | 5 | 5 | 4 | 4.64 | 4.71 |
| 41 | 5 | 5 | 5 | 5 | 5 | 5 | 5 | 5 | 5.00 | 5 | 5 | 5 | 5 | 5 | 5 | 5 | 5.00 | 5 | 5 | 5 | 5 | 5 | 5 | 5 | 5 | 5 | 5 | 5 | 5.00 | 5.00 |
| 42 | 5 | 5 | 5 | 5 | 5 | 5 | 5 | 5 | 5.00 | 5 | 5 | 5 | 5 | 5 | 5 | 5 | 5.00 | 5 | 5 | 5 | 5 | 5 | 5 | 5 | 5 | 5 | 5 | 5 | 5.00 | 5.00 |
| 43 | 5 | 4 | 5 | 5 | 5 | 5 | 4 | 5 | 4.75 | 5 | 5 | 4 | 5 | 5 | 4 | 4 | 4.57 | 5 | 5 | 5 | 5 | 5 | 4 | 5 | 5 | 5 | 5 | 5 | 4.91 | 4.74 |
| 44 | 5 | 5 | 5 | 5 | 5 | 5 | 5 | 5 | 5.00 | 5 | 5 | 5 | 5 | 5 | 4 | 5 | 4.86 | 5 | 5 | 5 | 4 | 5 | 5 | 5 | 5 | 5 | 5 | 5 | 4.91 | 4.92 |
| 45 | 5 | 5 | 4 | 4 | 5 | 4 | 5 | 5 | 4.63 | 5 | 4 | 4 | 5 | 4 | 4 | 5 | 4.43 | 5 | 4 | 4 | 5 | 5 | 4 | 5 | 4 | 5 | 5 | 4 | 4.55 | 4.53 |
| 46 | 5 | 5 | 5 | 5 | 5 | 5 | 5 | 5 | 5.00 | 5 | 5 | 5 | 5 | 5 | 5 | 5 | 5.00 | 5 | 5 | 4 | 5 | 5 | 5 | 5 | 4 | 5 | 5 | 5 | 4.82 | 4.94 |
| 47 | 4 | 4 | 4 | 4 | 4 | 4 | 4 | 4 | 4.00 | 5 | 4 | 4 | 3 | 3 | 5 | 5 | 4.14 | 4 | 4 | 3 | 5 | 5 | 5 | 4 | 5 | 5 | 4 | 5 | 4.45 | 4.20 |
| 48 | 3 | 3 | 3 | 3 | 4 | 3 | 3 | 3 | 3.13 | 3 | 3 | 4 | 3 | 5 | 3 | 3 | 3.43 | 5 | 3 | 4 | 3 | 4 | 4 | 3 | 4 | 4 | 3 | 5 | 3.82 | 3.46 |
| 49 | 5 | 4 | 5 | 5 | 5 | 5 | 5 | 5 | 4.88 | 5 | 5 | 5 | 5 | 4 | 5 | 5 | 4.86 | 4 | 5 | 5 | 5 | 5 | 5 | 5 | 4 | 5 | 5 | 5 | 4.82 | 4.85 |
| 50 | 5 | 5 | 5 | 5 | 5 | 5 | 5 | 5 | 5.00 | 5 | 5 | 5 | 5 | 5 | 5 | 5 | 5.00 | 5 | 5 | 5 | 5 | 5 | 5 | 5 | 5 | 5 | 5 | 5 | 5.00 | 5.00 |
| 51 | 2 | 3 | 2 | 3 | 2 | 2 | 2 | 3 | 2.38 | 3 | 2 | 3 | 2 | 3 | 3 | 3 | 2.71 | 2 | 3 | 2 | 4 | 3 | 2 | 3 | 2 | 3 | 3 | 3 | 2.73 | 2.61 |
| 52 | 2 | 3 | 2 | 3 | 2 | 2 | 2 | 3 | 2.38 | 3 | 2 | 3 | 2 | 3 | 3 | 3 | 2.71 | 2 | 3 | 2 | 4 | 3 | 2 | 3 | 2 | 3 | 3 | 3 | 2.73 | 2.61 |
| 53 | 5 | 5 | 5 | 5 | 5 | 4 | 5 | 5 | 4.88 | 5 | 5 | 5 | 5 | 5 | 5 | 5 | 5.00 | 5 | 5 | 5 | 5 | 5 | 5 | 5 | 4 | 4 | 5 | 5 | 4.82 | 4.90 |
| 54 | 5 | 5 | 5 | 5 | 5 | 5 | 5 | 5 | 5.00 | 5 | 5 | 5 | 5 | 5 | 5 | 5 | 5.00 | 5 | 5 | 5 | 5 | 5 | 5 | 5 | 5 | 5 | 5 | 5 | 5.00 | 5.00 |
| 55 | 5 | 5 | 5 | 5 | 5 | 5 | 5 | 5 | 5.00 | 5 | 5 | 5 | 5 | 5 | 5 | 5 | 5.00 | 5 | 5 | 5 | 5 | 5 | 5 | 5 | 5 | 5 | 5 | 5 | 5.00 | 5.00 |
| 56 | 5 | 4 | 5 | 5 | 5 | 5 | 5 | 5 | 4.88 | 4 | 5 | 5 | 5 | 5 | 4 | 4 | 4.57 | 5 | 5 | 5 | 5 | 5 | 5 | 5 | 4 | 4 | 4 | 5 | 4.73 | 4.72 |
| 57 | 4 | 2 | 4 | 4 | 5 | 4 | 5 | 4 | 4.00 | 5 | 4 | 5 | 4 | 4 | 4 | 4 | 4.29 | 4 | 5 | 5 | 5 | 4 | 4 | 4 | 4 | 4 | 5 | 4 | 4.36 | 4.22 |
| 58 | 4 | 4 | 4 | 5 | 5 | 4 | 5 | 5 | 4.50 | 5 | 5 | 5 | 5 | 5 | 5 | 5 | 5.00 | 5 | 5 | 5 | 5 | 4 | 5 | 4 | 4 | 4 | 4 | 5 | 4.55 | 4.68 |

| | | | | | | | | | | | | | | | | | | | | | | | | | | | | | | |
|---|---|---|---|---|---|---|---|---|---|---|---|---|---|---|---|---|---|---|---|---|---|---|---|---|---|---|---|---|---|---|
| 59 | 5 | 5 | 5 | 5 | 5 | 5 | 5 | 5 | 5.00 | 5 | 5 | 5 | 5 | 5 | 5 | 5 | 5.00 | 5 | 5 | 5 | 5 | 5 | 5 | 5 | 5 | 5 | 5 | 5 | 5.00 | 5.00 |
| 60 | 5 | 5 | 5 | 5 | 5 | 5 | 5 | 5 | 5.00 | 5 | 5 | 5 | 5 | 5 | 5 | 5 | 5.00 | 5 | 5 | 5 | 5 | 5 | 5 | 5 | 5 | 5 | 5 | 5 | 5.00 | 5.00 |
| 61 | 4 | 4 | 4 | 4 | 4 | 4 | 3 | 4 | 3.88 | 4 | 3 | 4 | 3 | 4 | 3 | 4 | 3.57 | 4 | 4 | 3 | 4 | 4 | 4 | 4 | 4 | 4 | 4 | 4 | 3.91 | 3.79 |
| 62 | 5 | 4 | 5 | 5 | 5 | 4 | 5 | 4 | 4.63 | 5 | 5 | 5 | 5 | 5 | 5 | 5 | 5.00 | 5 | 5 | 5 | 5 | 5 | 5 | 5 | 5 | 5 | 4 | 5 | 4.91 | 4.84 |
| 63 | 5 | 5 | 5 | 5 | 5 | 5 | 5 | 5 | 5.00 | 5 | 5 | 5 | 5 | 5 | 5 | 5 | 5.00 | 5 | 5 | 5 | 5 | 5 | 5 | 5 | 5 | 5 | 5 | 5 | 5.00 | 5.00 |
| 64 | 4 | 4 | 4 | 4 | 5 | 5 | 5 | 4 | 4.38 | 4 | 4 | 3 | 4 | 4 | 3 | 3 | 3.57 | 4 | 3 | 4 | 4 | 3 | 3 | 4 | 4 | 3 | 4 | 4 | 3.64 | 3.86 |
| 65 | 3 | 3 | 3 | 3 | 4 | 4 | 3 | 3 | 3.25 | 3 | 3 | 3 | 3 | 3 | 3 | 3 | 3.00 | 3 | 3 | 3 | 2 | 3 | 3 | 3 | 3 | 3 | 2 | 3 | 2.82 | 3.02 |
| 66 | 5 | 4 | 4 | 4 | 5 | 5 | 5 | 4 | 4.50 | 4 | 4 | 3 | 4 | 4 | 3 | 3 | 3.57 | 4 | 3 | 4 | 4 | 3 | 3 | 4 | 4 | 3 | 4 | 4 | 3.64 | 3.90 |
| 67 | 4 | 4 | 4 | 4 | 5 | 5 | 5 | 4 | 4.38 | 4 | 4 | 3 | 4 | 4 | 3 | 3 | 3.57 | 4 | 3 | 4 | 4 | 3 | 3 | 4 | 4 | 3 | 4 | 4 | 3.64 | 3.86 |
| 68 | 4 | 4 | 4 | 4 | 5 | 5 | 5 | 4 | 4.38 | 4 | 4 | 3 | 4 | 4 | 3 | 3 | 3.57 | 4 | 3 | 4 | 4 | 3 | 3 | 4 | 4 | 3 | 4 | 4 | 3.64 | 3.86 |
| 69 | 5 | 4 | 4 | 5 | 4 | 4 | 4 | 4 | 4.25 | 4 | 4 | 4 | 4 | 4 | 4 | 4 | 4.00 | 4 | 4 | 4 | 5 | 4 | 5 | 4 | 4 | 4 | 4 | 4 | 4.18 | 4.14 |
| 70 | 4 | 3 | 4 | 3 | 4 | 3 | 4 | 3 | 3.50 | 2 | 2 | 3 | 2 | 2 | 3 | 3 | 2.43 | 3 | 2 | 3 | 4 | 3 | 4 | 3 | 2 | 3 | 3 | 3 | 3.00 | 2.98 |
| 71 | 5 | 4 | 5 | 5 | 4 | 4 | 4 | 4 | 4.38 | 4 | 4 | 4 | 4 | 4 | 4 | 4 | 4.00 | 4 | 4 | 4 | 5 | 4 | 5 | 4 | 4 | 4 | 4 | 4 | 4.18 | 4.19 |
| 72 | 4 | 4 | 3 | 4 | 5 | 5 | 5 | 4 | 4.25 | 4 | 4 | 3 | 4 | 4 | 3 | 3 | 3.57 | 4 | 3 | 4 | 4 | 3 | 3 | 4 | 4 | 3 | 4 | 4 | 3.64 | 3.82 |
| 73 | 2 | 3 | 2 | 3 | 2 | 2 | 2 | 3 | 2.38 | 3 | 2 | 3 | 2 | 3 | 3 | 3 | 2.71 | 2 | 3 | 2 | 4 | 3 | 2 | 3 | 2 | 3 | 3 | 3 | 2.73 | 2.61 |
| 74 | 5 | 5 | 5 | 5 | 5 | 5 | 5 | 5 | 5.00 | 5 | 5 | 5 | 5 | 5 | 5 | 5 | 5.00 | 5 | 5 | 5 | 5 | 5 | 5 | 5 | 5 | 5 | 5 | 5 | 5.00 | 5.00 |
| 75 | 4 | 4 | 4 | 5 | 4 | 4 | 4 | 4 | 4.13 | 4 | 4 | 4 | 4 | 4 | 4 | 4 | 4.00 | 4 | 4 | 4 | 5 | 4 | 5 | 4 | 4 | 4 | 4 | 4 | 4.18 | 4.10 |
| 76 | 3 | 3 | 3 | 4 | 3 | 3 | 3 | 3 | 3.13 | 3 | 3 | 3 | 3 | 4 | 3 | 3 | 3.14 | 3 | 3 | 2 | 2 | 3 | 2 | 3 | 2 | 3 | 3 | 3 | 2.64 | 2.97 |
| 77 | 5 | 5 | 5 | 5 | 5 | 5 | 4 | 5 | 4.88 | 4 | 5 | 5 | 3 | 5 | 5 | 4 | 4.43 | 4 | 5 | 2 | 5 | 5 | 4 | 5 | 4 | 5 | 5 | 5 | 4.45 | 4.59 |
| 78 | 4 | 3 | 4 | 3 | 3 | 1 | 3 | 4 | 3.13 | 2 | 4 | 3 | 3 | 3 | 4 | 3 | 3.14 | 2 | 2 | 2 | 3 | 3 | 2 | 3 | 1 | 3 | 4 | 3 | 2.55 | 2.94 |
| 79 | 4 | 5 | 4 | 5 | 5 | 3 | 5 | 4 | 4.38 | 4 | 5 | 3 | 4 | 5 | 4 | 4 | 4.14 | 4 | 5 | 4 | 5 | 4 | 4 | 5 | 5 | 4 | 4 | 5 | 4.45 | 4.32 |
| 80 | 5 | 5 | 5 | 5 | 4 | 4 | 5 | 5 | 4.75 | 5 | 4 | 5 | 5 | 5 | 5 | 4 | 4.71 | 5 | 5 | 5 | 5 | 5 | 5 | 5 | 5 | 4 | 4 | 5 | 4.82 | 4.76 |
| 81 | 5 | 5 | 5 | 5 | 5 | 5 | 5 | 5 | 5.00 | 5 | 5 | 5 | 5 | 5 | 5 | 5 | 5.00 | 5 | 5 | 5 | 5 | 5 | 5 | 5 | 5 | 5 | 5 | 5 | 5.00 | 5.00 |
| 82 | 4 | 3 | 4 | 3 | 4 | 3 | 4 | 3 | 3.50 | 3 | 4 | 3 | 4 | 3 | 4 | 4 | 3.57 | 3 | 4 | 3 | 4 | 3 | 2 | 4 | 3 | 3 | 3 | 4 | 3.27 | 3.45 |
| 83 | 5 | 4 | 4 | 4 | 4 | 4 | 5 | 5 | 4.38 | 5 | 5 | 4 | 5 | 5 | 5 | 5 | 4.86 | 4 | 4 | 5 | 5 | 4 | 5 | 5 | 4 | 4 | 4 | 4 | 4.36 | 4.53 |
| 84 | 5 | 5 | 5 | 5 | 5 | 5 | 5 | 5 | 5.00 | 5 | 4 | 4 | 4 | 5 | 5 | 5 | 4.57 | 5 | 5 | 3 | 5 | 5 | 5 | 5 | 5 | 5 | 4 | 5 | 4.73 | 4.77 |
| 85 | 5 | 5 | 4 | 4 | 5 | 5 | 5 | 5 | 4.75 | 5 | 5 | 5 | 5 | 5 | 5 | 5 | 5.00 | 5 | 5 | 3 | 5 | 5 | 5 | 5 | 5 | 5 | 5 | 5 | 4.82 | 4.86 |
| 86 | 4 | 3 | 3 | 4 | 3 | 4 | 3 | 3 | 3.38 | 4 | 3 | 4 | 3 | 3 | 3 | 3 | 3.29 | 4 | 3 | 3 | 4 | 3 | 4 | 3 | 4 | 3 | 3 | 4 | 3.45 | 3.37 |
| 87 | 5 | 5 | 5 | 5 | 5 | 5 | 5 | 5 | 5.00 | 5 | 5 | 4 | 5 | 5 | 5 | 5 | 4.86 | 5 | 5 | 5 | 5 | 5 | 5 | 5 | 4 | 5 | 4 | 5 | 4.82 | 4.89 |
| 88 | 5 | 5 | 5 | 5 | 5 | 4 | 5 | 5 | 4.88 | 5 | 5 | 5 | 5 | 5 | 5 | 5 | 5.00 | 5 | 5 | 5 | 5 | 5 | 5 | 5 | 5 | 5 | 5 | 5 | 5.00 | 4.96 |
| 89 | 5 | 5 | 5 | 5 | 5 | 5 | 5 | 5 | 5.00 | 4 | 4 | 4 | 4 | 4 | 4 | 4 | 4.00 | 4 | 4 | 4 | 4 | 4 | 4 | 4 | 4 | 4 | 4 | 4 | 4.00 | 4.33 |

| | | | | | | | | | | | | | | | | | | | | | | | | | | | | | | |
|---|---|---|---|---|---|---|---|---|---|---|---|---|---|---|---|---|---|---|---|---|---|---|---|---|---|---|---|---|---|---|
| 90 | 5 | 5 | 4 | 5 | 4 | 5 | 4 | 5 | 4.63 | 4 | 5 | 4 | 5 | 4 | 5 | 4 | 4.43 | 4 | 5 | 4 | 5 | 4 | 4 | 5 | 4 | 4 | 4 | 5 | 4.36 | 4.47 |
| 91 | 4 | 3 | 2 | 3 | 3 | 2 | 3 | 4 | 3.00 | 3 | 4 | 3 | 4 | 3 | 4 | 3 | 3.43 | 3 | 2 | 2 | 4 | 3 | 4 | 3 | 4 | 3 | 3 | 3 | 3.09 | 3.17 |
| 92 | 5 | 4 | 4 | 5 | 5 | 4 | 5 | 5 | 4.63 | 4 | 5 | 4 | 4 | 5 | 4 | 4 | 4.29 | 5 | 5 | 4 | 5 | 4 | 5 | 5 | 4 | 4 | 4 | 5 | 4.55 | 4.49 |
| 93 | 5 | 5 | 5 | 5 | 5 | 5 | 5 | 5 | 5.00 | 5 | 3 | 5 | 5 | 3 | 3 | 5 | 4.14 | 5 | 5 | 3 | 5 | 5 | 3 | 5 | 5 | 5 | 3 | 5 | 4.45 | 4.53 |
| 94 | 3 | 4 | 3 | 4 | 3 | 4 | 3 | 2 | 3.25 | 3 | 2 | 3 | 2 | 3 | 2 | 2 | 2.43 | 3 | 2 | 3 | 2 | 3 | 2 | 3 | 2 | 3 | 3 | 3 | 2.64 | 2.77 |
| 95 | 4 | 4 | 4 | 4 | 4 | 4 | 4 | 4 | 4.00 | 4 | 4 | 4 | 4 | 4 | 4 | 4 | 4.00 | 4 | 4 | 3 | 4 | 4 | 4 | 4 | 4 | 4 | 4 | 4 | 3.91 | 3.97 |
| 96 | 4 | 4 | 4 | 4 | 4 | 4 | 4 | 4 | 4.00 | 4 | 4 | 4 | 4 | 5 | 5 | 4 | 4.29 | 4 | 4 | 4 | 4 | 4 | 4 | 4 | 4 | 4 | 4 | 4 | 4.00 | 4.10 |
| 97 | 4 | 4 | 4 | 4 | 4 | 4 | 4 | 4 | 4.00 | 4 | 4 | 4 | 4 | 5 | 5 | 4 | 4.29 | 4 | 4 | 4 | 4 | 4 | 4 | 4 | 4 | 4 | 4 | 4 | 4.00 | 4.10 |
| 98 | 5 | 5 | 4 | 4 | 4 | 4 | 4 | 4 | 4.25 | 4 | 4 | 4 | 4 | 4 | 4 | 5 | 4.14 | 5 | 5 | 5 | 5 | 5 | 5 | 5 | 5 | 5 | 5 | 5 | 5.00 | 4.46 |
| 99 | 3 | 2 | 3 | 3 | 4 | 3 | 3 | 2 | 2.88 | 3 | 2 | 3 | 3 | 3 | 3 | 4 | 3.00 | 4 | 3 | 4 | 3 | 4 | 3 | 4 | 3 | 3 | 3 | 3 | 3.36 | 3.08 |
| 100 | 5 | 5 | 5 | 5 | 5 | 4 | 4 | 4 | 4.63 | 4 | 4 | 4 | 4 | 5 | 4 | 4 | 4.14 | 4 | 4 | 2 | 4 | 4 | 4 | 4 | 3 | 3 | 3 | 3 | 3.45 | 4.07 |
| 101 | 4 | 5 | 5 | 5 | 5 | 5 | 5 | 5 | 4.88 | 5 | 5 | 5 | 5 | 5 | 5 | 4 | 4.86 | 5 | 5 | 5 | 5 | 5 | 5 | 5 | 4 | 4 | 4 | 4 | 4.64 | 4.79 |
| 102 | 4 | 3 | 4 | 4 | 4 | 4 | 4 | 4 | 3.88 | 4 | 4 | 3 | 4 | 4 | 4 | 4 | 3.83 | 4 | 4 | 4 | 4 | 4 | 4 | 4 | 3 | 2 | 3 | 3 | 3.55 | 3.75 |
| 103 | 5 | 4 | 4 | 5 | 4 | 5 | 5 | 5 | 4.63 | 5 | 5 | 4 | 4 | 5 | 4 | 5 | 4.50 | 5 | 5 | 5 | 5 | 5 | 5 | 5 | 5 | 5 | 5 | 5 | 5.00 | 4.71 |
| 104 | 5 | 4 | 4 | 5 | 4 | 5 | 5 | 5 | 4.63 | 5 | 5 | 4 | 4 | 5 | 4 | 5 | 4.50 | 5 | 5 | 5 | 5 | 5 | 5 | 5 | 5 | 5 | 5 | 5 | 5.00 | 4.71 |
| 105 | 5 | 4 | 4 | 4 | 4 | 5 | 4 | 4 | 4.25 | 5 | 5 | 4 | 4 | 4 | 4 | 5 | 4.33 | 4 | 4 | 5 | 4 | 5 | 5 | 5 | 5 | 4 | 5 | 5 | 4.64 | 4.41 |
| 106 | 3 | 3 | 3 | 3 | 3 | 4 | 3 | 3 | 3.13 | 4 | 3 | 3 | 3 | 3 | 3 | 4 | 3.17 | 3 | 3 | 4 | 3 | 4 | 4 | 4 | 4 | 3 | 4 | 3 | 3.55 | 3.28 |
| 107 | 5 | 5 | 5 | 5 | 4 | 5 | 5 | 5 | 4.88 | 5 | 5 | 5 | 5 | 5 | 4 | 5 | 4.83 | 5 | 5 | 5 | 5 | 5 | 5 | 5 | 4 | 5 | 4 | 5 | 4.82 | 4.84 |
| 108 | 5 | 5 | 5 | 5 | 5 | 5 | 5 | 5 | 5.00 | 5 | 5 | 4 | 4 | 5 | 5 | 5 | 4.71 | 5 | 5 | 5 | 5 | 5 | 5 | 5 | 5 | 4 | 5 | 5 | 4.91 | 4.87 |
| 109 | 4 | 3 | 4 | 3 | 4 | 3 | 3 | 3 | 3.38 | 3 | 4 | 3 | 3 | 3 | 2 | 3 | 3.00 | 3 | 2 | 3 | 2 | 3 | 3 | 4 | 4 | 4 | 4 | 4 | 3.27 | 3.22 |
| 110 | 4 | 5 | 5 | 5 | 5 | 4 | 4 | 4 | 4.50 | 4 | 5 | 4 | 4 | 4 | 4 | 4 | 4.14 | 4 | 5 | 5 | 5 | 4 | 4 | 5 | 4 | 4 | 4 | 4 | 4.36 | 4.34 |
| 111 | 3 | 2 | 3 | 2 | 3 | 3 | 2 | 3 | 2.63 | 3 | 3 | 3 | 3 | 2 | 3 | 3 | 2.86 | 3 | 2 | 3 | 2 | 3 | 3 | 3 | 3 | 3 | 2 | 3 | 2.73 | 2.74 |
| 112 | 5 | 5 | 5 | 5 | 5 | 5 | 5 | 5 | 5.00 | 5 | 5 | 5 | 5 | 5 | 5 | 5 | 5.00 | 5 | 5 | 5 | 5 | 5 | 5 | 5 | 5 | 5 | 5 | 5 | 5.00 | 5.00 |
| 113 | 5 | 5 | 5 | 5 | 5 | 5 | 5 | 5 | 5.00 | 5 | 5 | 5 | 5 | 5 | 5 | 5 | 5.00 | 5 | 5 | 5 | 5 | 5 | 5 | 5 | 5 | 5 | 5 | 5 | 5.00 | 5.00 |
| 114 | 5 | 5 | 5 | 5 | 5 | 5 | 5 | 5 | 5.00 | 5 | 5 | 5 | 5 | 5 | 5 | 5 | 5.00 | 5 | 5 | 5 | 5 | 5 | 5 | 5 | 5 | 5 | 5 | 5 | 5.00 | 5.00 |
| 115 | 4 | 3 | 4 | 3 | 3 | 4 | 3 | 2 | 3.25 | 2 | 4 | 3 | 3 | 2 | 3 | 3 | 2.86 | 3 | 2 | 3 | 2 | 3 | 2 | 3 | 2 | 3 | 3 | 4 | 2.73 | 2.94 |
| 116 | 4 | 5 | 4 | 5 | 5 | 4 | 4 | 4 | 4.38 | 4 | 4 | 4 | 4 | 4 | 4 | 5 | 4.14 | 4 | 4 | 4 | 5 | 4 | 4 | 5 | 4 | 4 | 4 | 4 | 4.18 | 4.23 |
| 117 | 4 | 4 | 4 | 5 | 5 | 4 | 4 | 4 | 4.25 | 4 | 4 | 4 | 4 | 4 | 4 | 5 | 4.14 | 4 | 4 | 4 | 5 | 4 | 4 | 5 | 4 | 4 | 4 | 4 | 4.18 | 4.19 |
| 118 | 5 | 5 | 5 | 4 | 4 | 5 | 5 | 4 | 4.63 | 5 | 4 | 5 | 4 | 5 | 4 | 5 | 4.57 | 5 | 5 | 5 | 5 | 5 | 5 | 4 | 4 | 4 | 4 | 4 | 4.55 | 4.58 |
| 119 | 5 | 5 | 5 | 4 | 5 | 4 | 5 | 5 | 4.75 | 4 | 4 | 4 | 5 | 5 | 5 | 5 | 4.57 | 5 | 5 | 5 | 5 | 5 | 5 | 5 | 4 | 4 | 4 | 5 | 4.73 | 4.68 |
| 120 | 5 | 5 | 4 | 4 | 5 | 5 | 5 | 5 | 4.75 | 4 | 5 | 4 | 4 | 5 | 5 | 5 | 4.57 | 4 | 4 | 5 | 4 | 5 | 5 | 4 | 4 | 5 | 4 | 5 | 4.45 | 4.59 |

| | | | | | | | | | | | | | | | | | | | | | | | | | | | | | | |
|---|---|---|---|---|---|---|---|---|---|---|---|---|---|---|---|---|---|---|---|---|---|---|---|---|---|---|---|---|---|---|
| 121 | 4 | 4 | 3 | 2 | 3 | 3 | 2 | 3 | 3.00 | 3 | 3 | 3 | 3 | 2 | 3 | 4 | 3.00 | 3 | 3 | 4 | 3 | 4 | 2 | 3 | 3 | 2 | 4 | 3 | 3.09 | 3.03 |
| 122 | 4 | 4 | 4 | 4 | 4 | 4 | 4 | 5 | 4.13 | 5 | 5 | 5 | 5 | 4 | 4 | 4 | 4.57 | 4 | 4 | 5 | 4 | 5 | 4 | 4 | 4 | 4 | 4 | 4 | 4.18 | 4.29 |
| 123 | 4 | 4 | 4 | 4 | 5 | 4 | 5 | 5 | 4.38 | 4 | 5 | 5 | 5 | 5 | 4 | 5 | 4.71 | 4 | 4 | 4 | 4 | 4 | 4 | 4 | 4 | 4 | 4 | 5 | 4.09 | 4.39 |
| 124 | 5 | 5 | 4 | 5 | 4 | 5 | 4 | 5 | 4.63 | 4 | 5 | 5 | 4 | 5 | 4 | 5 | 4.57 | 4 | 5 | 4 | 5 | 4 | 5 | 4 | 5 | 4 | 5 | 4 | 4.45 | 4.55 |
| 125 | 5 | 5 | 5 | 5 | 5 | 5 | 5 | 5 | 5.00 | 5 | 5 | 5 | 5 | 5 | 5 | 5 | 5.00 | 5 | 5 | 5 | 5 | 5 | 5 | 5 | 5 | 5 | 5 | 5 | 5.00 | 5.00 |
| 126 | 2 | 3 | 4 | 4 | 5 | 4 | 4 | 4 | 3.75 | 3 | 5 | 4 | 4 | 3 | 4 | 4 | 3.86 | 3 | 4 | 3 | 4 | 4 | 5 | 4 | 3 | 3 | 3 | 3 | 3.55 | 3.72 |
| 127 | 4 | 5 | 5 | 5 | 5 | 5 | 5 | 5 | 4.88 | 5 | 5 | 4 | 5 | 5 | 5 | 5 | 4.86 | 5 | 5 | 5 | 5 | 5 | 5 | 5 | 5 | 4 | 4 | 4 | 4.73 | 4.82 |
| 128 | 3 | 4 | 4 | 3 | 4 | 3 | 3 | 4 | 3.50 | 3 | 4 | 3 | 4 | 3 | 4 | 3 | 3.43 | 4 | 3 | 4 | 3 | 4 | 4 | 4 | 4 | 4 | 4 | 4 | 3.82 | 3.58 |
| 129 | 5 | 5 | 5 | 5 | 5 | 3 | 4 | 5 | 4.63 | 5 | 5 | 5 | 5 | 5 | 5 | 5 | 5.00 | 5 | 5 | 3 | 4 | 4 | 5 | 5 | 3 | 3 | 5 | 5 | 4.27 | 4.63 |
| 130 | 5 | 5 | 5 | 5 | 5 | 5 | 5 | 5 | 5.00 | 5 | 5 | 5 | 5 | 5 | 5 | 5 | 5.00 | 5 | 5 | 5 | 5 | 5 | 5 | 5 | 5 | 5 | 5 | 5 | 5.00 | 5.00 |
| 131 | 4 | 3 | 4 | 3 | 4 | 3 | 4 | 3 | 3.50 | 4 | 3 | 4 | 3 | 4 | 3 | 4 | 3.57 | 4 | 3 | 4 | 3 | 4 | 3 | 4 | 3 | 4 | 3 | 4 | 3.55 | 3.54 |
| 132 | 5 | 5 | 5 | 5 | 5 | 5 | 5 | 5 | 5.00 | 5 | 5 | 5 | 5 | 5 | 5 | 5 | 5.00 | 5 | 5 | 5 | 5 | 5 | 5 | 5 | 5 | 5 | 5 | 5 | 5.00 | 5.00 |
| 133 | 5 | 5 | 5 | 5 | 5 | 5 | 5 | 5 | 5.00 | 5 | 5 | 5 | 5 | 5 | 5 | 5 | 5.00 | 5 | 5 | 5 | 5 | 5 | 5 | 5 | 5 | 5 | 5 | 5 | 5.00 | 5.00 |
| 134 | 4 | 3 | 4 | 3 | 4 | 3 | 4 | 3 | 3.50 | 3 | 4 | 3 | 4 | 3 | 4 | 3 | 3.43 | 3 | 4 | 3 | 4 | 3 | 4 | 3 | 4 | 3 | 4 | 3 | 3.45 | 3.46 |
| 135 | 5 | 5 | 5 | 5 | 5 | 5 | 5 | 5 | 5.00 | 5 | 5 | 5 | 5 | 5 | 5 | 5 | 5.00 | 5 | 5 | 5 | 5 | 5 | 5 | 5 | 5 | 5 | 5 | 5 | 5.00 | 5.00 |
| 136 | 5 | 5 | 5 | 5 | 5 | 5 | 5 | 5 | 5.00 | 5 | 5 | 5 | 5 | 5 | 5 | 5 | 5.00 | 5 | 5 | 5 | 5 | 5 | 5 | 5 | 5 | 5 | 5 | 5 | 5.00 | 5.00 |
| 137 | 4 | 4 | 3 | 3 | 3 | 4 | 3 | 4 | 3.50 | 4 | 3 | 4 | 3 | 4 | 3 | 4 | 3.57 | 4 | 3 | 3 | 3 | 3 | 3 | 4 | 3 | 4 | 3 | 4 | 3.36 | 3.48 |
| 138 | 5 | 5 | 5 | 5 | 5 | 5 | 5 | 5 | 5.00 | 5 | 5 | 5 | 5 | 5 | 5 | 5 | 5.00 | 5 | 5 | 5 | 5 | 5 | 5 | 5 | 5 | 5 | 5 | 5 | 5.00 | 5.00 |
| 139 | 5 | 5 | 5 | 5 | 5 | 5 | 5 | 5 | 5.00 | 5 | 5 | 5 | 5 | 5 | 5 | 5 | 5.00 | 5 | 5 | 5 | 5 | 5 | 5 | 5 | 4 | 5 | 5 | 5 | 4.91 | 4.97 |
| 140 | 4 | 5 | 5 | 5 | 5 | 3 | 4 | 4 | 4.38 | 4 | 5 | 5 | 5 | 5 | 5 | 5 | 4.86 | 5 | 5 | 5 | 5 | 5 | 5 | 4 | 5 | 5 | 5 | 5 | 4.91 | 4.71 |
| 141 | 4 | 4 | 4 | 5 | 5 | 4 | 4 | 4 | 4.25 | 5 | 5 | 4 | 4 | 5 | 5 | 4 | 4.57 | 4 | 5 | 4 | 5 | 4 | 4 | 4 | 5 | 4 | 4 | 4 | 4.27 | 4.36 |
| 142 | 4 | 5 | 5 | 5 | 5 | 5 | 5 | 5 | 4.88 | 5 | 5 | 5 | 5 | 5 | 5 | 5 | 5.00 | 5 | 5 | 5 | 5 | 5 | 5 | 5 | 5 | 5 | 5 | 5 | 5.00 | 4.96 |
| 143 | 3 | 3 | 4 | 3 | 4 | 3 | 4 | 4 | 3.50 | 1 | 2 | 3 | 2 | 3 | 3 | 2 | 2.29 | 3 | 2 | 3 | 2 | 3 | 2 | 3 | 2 | 2 | 3 | 2 | 2.45 | 2.75 |
| 144 | 4 | 4 | 5 | 4 | 5 | 5 | 4 | 4 | 4.38 | 5 | 5 | 4 | 3 | 5 | 5 | 5 | 4.57 | 5 | 3 | 4 | 4 | 4 | 5 | 5 | 4 | 4 | 4 | 4 | 4.18 | 4.38 |
| 145 | 5 | 5 | 5 | 5 | 5 | 5 | 4 | 4 | 4.75 | 5 | 5 | 4 | 3 | 5 | 5 | 5 | 4.57 | 5 | 3 | 4 | 4 | 4 | 5 | 5 | 5 | 4 | 4 | 4 | 4.27 | 4.53 |
| 146 | 4 | 5 | 4 | 5 | 4 | 5 | 4 | 4 | 4.38 | 5 | 5 | 4 | 3 | 5 | 5 | 5 | 4.57 | 5 | 3 | 4 | 4 | 4 | 5 | 5 | 4 | 4 | 4 | 4 | 4.18 | 4.38 |
| 147 | 5 | 5 | 5 | 5 | 5 | 5 | 5 | 5 | 5.00 | 5 | 5 | 5 | 5 | 5 | 5 | 5 | 5.00 | 5 | 5 | 5 | 5 | 5 | 5 | 4 | 5 | 5 | 5 | 5 | 4.91 | 4.97 |
| 148 | 4 | 4 | 3 | 4 | 4 | 4 | 3 | 4 | 3.75 | 4 | 3 | 4 | 3 | 4 | 4 | 3 | 3.57 | 4 | 3 | 4 | 3 | 4 | 3 | 4 | 3 | 4 | 4 | 4 | 3.64 | 3.65 |
| 149 | 5 | 5 | 5 | 4 | 5 | 4 | 4 | 5 | 4.63 | 5 | 5 | 4 | 4 | 5 | 3 | 4 | 4.29 | 4 | 4 | 4 | 5 | 5 | 4 | 5 | 4 | 4 | 3 | 5 | 4.27 | 4.39 |
| 150 | 5 | 5 | 5 | 5 | 5 | 5 | 5 | 5 | 5.00 | 5 | 5 | 5 | 5 | 5 | 5 | 5 | 5.00 | 5 | 5 | 4 | 5 | 5 | 5 | 5 | 4 | 5 | 5 | 5 | 4.82 | 4.94 |
| 151 | 4 | 4 | 4 | 3 | 4 | 3 | 4 | 4 | 3.75 | 4 | 5 | 5 | 5 | 3 | 4 | 4 | 4.29 | 5 | 4 | 3 | 4 | 3 | 4 | 3 | 4 | 3 | 3 | 3 | 3.55 | 3.86 |

| | | | | | | | | | | | | | | | | | | | | | | | | | | | | | | |
|---|---|---|---|---|---|---|---|---|---|---|---|---|---|---|---|---|---|---|---|---|---|---|---|---|---|---|---|---|---|---|
| 152 | 4 | 5 | 5 | 5 | 5 | 5 | 5 | 5 | 4.88 | 5 | 5 | 4 | 4 | 5 | 5 | 4 | 4.57 | 4 | 5 | 4 | 5 | 5 | 5 | 5 | 4 | 4 | 4 | 4 | 4.45 | 4.63 |
| 153 | 4 | 4 | 4 | 5 | 5 | 5 | 4 | 4 | 4.38 | 5 | 5 | 4 | 3 | 5 | 5 | 5 | 4.57 | 5 | 3 | 4 | 4 | 4 | 5 | 5 | 5 | 4 | 4 | 5 | 4.36 | 4.44 |
| 154 | 5 | 5 | 5 | 5 | 5 | 5 | 4 | 4 | 4.75 | 5 | 5 | 4 | 3 | 5 | 5 | 5 | 4.57 | 5 | 3 | 4 | 4 | 4 | 5 | 4 | 5 | 4 | 5 | 4 | 4.27 | 4.53 |
| 155 | 5 | 5 | 5 | 5 | 5 | 5 | 4 | 4 | 4.75 | 5 | 5 | 4 | 3 | 5 | 5 | 5 | 4.57 | 5 | 3 | 4 | 4 | 4 | 5 | 5 | 5 | 5 | 4 | 5 | 4.45 | 4.59 |
| 156 | 5 | 5 | 5 | 5 | 5 | 5 | 5 | 5 | 5.00 | 5 | 5 | 5 | 5 | 5 | 5 | 5 | 5.00 | 5 | 5 | 5 | 5 | 5 | 5 | 5 | 5 | 5 | 5 | 5 | 5.00 | 5.00 |
| 157 | 5 | 5 | 5 | 5 | 5 | 5 | 5 | 5 | 5.00 | 5 | 5 | 5 | 5 | 5 | 5 | 5 | 5.00 | 5 | 5 | 5 | 5 | 5 | 5 | 5 | 5 | 5 | 5 | 5 | 5.00 | 5.00 |
| 158 | 5 | 5 | 5 | 5 | 5 | 5 | 5 | 5 | 5.00 | 5 | 5 | 5 | 5 | 5 | 5 | 5 | 5.00 | 5 | 5 | 5 | 5 | 5 | 5 | 5 | 5 | 5 | 5 | 5 | 5.00 | 5.00 |

Lampiran 11
Hasil Penelitian tentang Hubungan Seleksi Terbuka dengan Motivasi Kerja

| no | Nama Peneliti dan Tahun | Variabel Penelitian | Hasil Penelitian |
|---|---|---|---|
| 1 | Mohammad Iskak Elly, Seger Priantono dan Reny Augustina (2016) | Sistem rekrutmen dan penempatan posisi karyawan terhadap motivasi kerja | Hasil uji parsial dengan tingkat signifikan yang digunakan sebesar 0,05 (α = 5%) diperoleh nilai signifikan untuk variabel sistem rekrutmen sebesar 0,025 < 0,05, Untuk variabel penempatan posisi karyawan sebesar 0,013 < 0,05, Hal itu menunjukkan ada pengaruh sistem rekrutmen dan penempatan posisi karyawan terhadap motivasi kerja karyawan |
| 2 | Desy Rantika (2017) | Analisis Kebijaksanaan Seleksi dan Motivasi Karyawan | Hasil penelitan menunjukan proses seleksi yang signifikan terhadap kinerja karyawan |
| 3 | Almira Nanda Rizky Yani Heru Susilo Ika Ruhana (2016) | Penempatan Karyawan terhadap Motivasi dan Kinerja | Hasil penelitian menunjukkan bahwa variabel kesesuaian pengetahuan berpengaruh signifikan terhadap motivasi kerja dengan koefisien jalur sebesar 0,246; variabel kesesuaian keterampilan berpengaruh signifikan terhadap motivasi kerja dengan koefisien jalur sebesar 0,439; dan variabel motivasi kerja berpengaruh signifikan terhadap kinerja karyawan dengan koefisien jalur sebesar 0,390, |
| 4 | Rizky Hafiz Syahputra (2016) | Seleksi dan Penempatan Kerja | Seleksi dan penempatan memiliki pengaruh yang |

| | | | |
|---|---|---|---|
| | | terhadap Motivasi Kerja | signifikan terhadap motivasi kerja karyawan dengan tingkat korelasi sebesar 34,8% dan disimpulkan seleksi karyawan dan penempatan karyawan memiliki pengaruh terhadap motivasi karyawan baik secara simultan maupun parsial |

Hasil Penelitian tentang Hubungan dengan Kepuasan Kerja

| no | Nama Peneliti dan Tahun | Variabel Penelitian | Hasil Penelitian |
|---|---|---|---|
| 1 | Mohammad Yousef Abuhashesh, Rand Aldmour, and Ra Ed (2019) | Kepuasan kerja, kinerja terhadap kepuasan pelanggan | Kepuasan kerja sangat penting tidak hanya bagi staf itu sendiri tetapi juga untuk organisasi karena staf yang merasa puas akan melakukan pekerjaan dengan baik dan termotivasi untuk bekerja |
| 2 | Karel Tjahjadi (2015) | Kepuasan kerja dan motivasi kerja | Terdapat hubungan antara hasil pekerjaan dengan motivasi, terdapat hubungan antara gaji dengan motivasi, terdapat hubungan antara tanggung jawab dengan motivasi, tidak terdapat hubungan antara kesempatan maju dan lingkungan terhadap motivasi |
| 3 | Anggun Parassuci Adely (2017) | Kepemimpinan dan kepuasan kerja terhadap motivasi kerja | kepemimpinan dan kepuasan kerja berpengaruh positif terhadap motivasi kerja karyawan |
| 4 | Thara Afifah Mochammad Al Musadieq (2017) | Kepuasan kerja terhadap motivasi kerja dan dampaknya terhadap | Kepuasan kerja karyawan memiliki pengaruh signifikan terhadap motivasi kerja |

| | | | |
|---|---|---|---|
| | | kinerja | Motivasi Kerja Karyawan memiliki pengaruh signifikan terhadap kinerja karyawan |
| 5 | Denno Heryanto, Sukisno S, Riadi, Robiansyah (2017) | Kepuasan kerja, dukungan organisasi dan gaya kepemimpinan terhadap motivasi kerja | Kepuasan variabel kerja memiliki efek pada motivasi kerja berpengaruh positif dan signifikan, dukungan organisasi memiliki efek pada motivasi kerja berpengaruh positif dan signifikan, gaya kepemimpinan berpengaruh pada motivasi kerja positif dan signifikan |

Hasil Penelitian tentang Hubungan Seleksi Terbuka dengan Kinerja Pegawai

| no | Nama Peneliti dan Tahun | Variabel Penelitian | Hasil Penelitian |
|---|---|---|---|
| 1 | Nurul Aisyah, Angelia Giovanni (2018) | Rekrutmen (Porek) dan Seleksi terhadap Kinerja Karyawan | Ada hubungan rekrutmen dan seleksi terhadap kinerja yang sangat kuat yaitu sebesar 0,887 (88,7%) adanya pengaruh rekrutmen dan seleksi terhadap kinerja, Besarnya angka koefisien determinasi 0,786 atau sama dengan 78,6%, sedangkan sisanya yaitu 21,4% (100%-78,6%) dijelaskan oleh faktor-faktor penyebab lainnya |
| 2 | Hastuti Naibaho (2012) | Rekrutmen dan Seleksi terhadap Kinerja Karyawan | Rekrutmen dan seleksi memberikan pengaruh yang tinggi terhadap kinerja karyawan, |
| 3 | Ceria Hermina, Feny Aulia, Sekar Safitri, Muhammad Husaini Aditya Noor (2020) | Rekrutment dan Seleksi terhadap Kinerja Karyawan | Kesalahan dalam rekrutment dan seleksi akan memberikan dampak yang besar bagi perusahaan dan kinerja pada karyawan yang |

| | | | |
|---|---|---|---|
| | | | bekerja pada perushaan tersebut, berkurangnya omset atau pendapatan perusahaan dan pemasukan gajih yang lambat sehingga kinerja yang di timbulkan karyawan akan menurun dan juga memicu berkurangnya konsumen atas booth server yang kurang baik |
| 4 | Fenezha J, Lotulong Yantje Uhing (2018) | Rekrutmen, Kriteria Seleksi, dan Pelatihan terhadap Kinerja Karyawan | Hasil penelitian menunjukan bahwa rekrutmen, kiteria seleksi dan pelatihan secara simultan maupun parsial berpengaruh signifikan terhadap kinerja karyawan, Faktor rekrutmen, kriteria seleksi, dan pelatihan sangat mempengaruhi kinerja karyawan sehingga fakor rekrutmen, kriteria seleksi dan pelatihan harus di perhatikan |
| 5 | Suryani Simbolon (2020) | Rekrutmen dan Seleksi Karyawan terhadap Kinerja | Hasil penelitian secara parsial melalui pengujian t diketahui bahwa variabel rekrutmen berpengaruh signifikan terhadap kinerja karyawan dan variabel seleksi berpengaruh tidak signifikan terhadap kinerja karyawan, Hasil penelitian secara simultan melalui pengujian F, rekrutmen dan seleksi secara simultan memiliki pengaruh signifikan terhadap kinerja karyawan, |
| 6 | Adinda Permatasari (2021) | Rekrutmen, Seleksi dan Lingkungan Kerja terhadap Kinerja Karyawan | Variabel Rekrutmen mempunyai pengaruh yang signifikan secara simultan sebesar 0,046 < 0,05, Seleksi mempunyai pengaruh yang signifikan secara simultan sebesar 0,000 < 0,05, Lingkungan Kerja |

| | | | |
|---|---|---|---|
| | | | mempunyai pengaruh yang signifikan secara simultan sebesar 0,012 < 0,05 terhadap variabel kinerja sehingga dapat diambil kesimpulan bahwa variabel bebas Rekrutmen (X1), Seleksi (X2), Lingkungan Kerja (X3) memiliki pengaruh signifikan secara simultan terhadap variabel terikat kinerja karyawan (Y) |
| 7 | Syafrizal, Pinondang Nainggolan, Resna Napitu (2020) | Rekrutmen dan Seleksi Terhadap Kinerja Karyawan | Hasil penelitian ini menunjukkan bahwa rekrutmen dan seleksi dalam uji hipotesis secara parsial (uji t) bahwa variabel rekrutmen (X1) berpengaruh signifikan terhadap kinerja karyawan (Y) dimana t-hitung > t-tabel dan signifikan 0,001 < 0,05, begitu juga dengan variabel seleksi (X2) berpengaruh signifikan terhadap kinerja karyawan (Y) dimana thitung > ttabel dan signifikan 0,025 < 0,05, Selanjutnya dengan uji bersama (uji F) bahwa secara bersama variabel rekrutmen (X1) dan seleksi (X2) berpengaruh signifikan terhadap kinerja karyawan (Y) dengan Fhitung > Ftabel atau signifikan 0,000 < 0,05, Dalam uji determinasi (R2) menyatakan bahwa variabel rekrutmen dan seleksi mempengaruhi variabel kinerja karyawan sebesar 71,4%, |
| 8 | Suryaman Natalia Aprilianti (2020) | Seleksi Pegawai, Penempatan Kerja dan Motivasi Kerja terhadap Mkinerja Kayawan | Terdapat pengaruh positif dan signifikan antara seleksi pegawai, penempatan kerja dan motivasi kerja baik secara parsial maupun |

| | | | |
|---|---|---|---|
| | | | simultan dengan kontribusi 84,40% terhadap kinerja karyawan, sedangkan sisanya dipengaruhi faktor lain yang tidak diteliti, |
| 9 | Mardianico Purna Ditya (2021) | Rekrutmen dan Seleksi terhadap Kinerja Karyawan | Proses rekrutmen dan seleksi memiliki nilai t-hitung lebih besar dari nilai t-tabel, dimana proses rekrutmen memiliki nilai t-hitung sebesar 7,016 > ttabel 1,9930 dan seleksi memiliki t-hitung sebesar 4,342 > t-tabel 1,9930 maka dapat disimpulkan bahwa masing-masing variable independen berpengaruh positif terhadap kinerja karyawan (variabel dependen), Variabel proses rekrutmen (X1) berpengaruh positif terhadap kinerja karyawan |
| 10 | Posman Andra Faizal, Susi Hendriani, Dhaviq Chairilsyah (2021) | Pengaruh Seleksi, Kemampuan Kerja dan Pelatihan terhadap Kinerja | Diperoleh t hitung sebesar 3,136 sementara t tabel dengan α=0,05 dan df sebesar 92 adalah 1,987, maka dengan demikian t hitung > t tabel dan nilai probabilitas signifikan (0,002) < 0,05) sehingga variabel seleksi berpengaruh positif dan signifikan terhadap variabel kinerja pegawai |

Hasil Penelitian tentang Hubungan Kepuasan Kerja dengan Kinerja Pegawai

| No | Nama Peneliti dan Tahun | Variabel Penelitian | Hasil Penelitian |
|---|---|---|---|
| 1 | Kasiyati Yunita Wulansari, Niki Kosasi | Kepuasan Kerja Terhadap Kinerja | Pengaruh kepuasan kerja terhadap kinerja sebesar 21,72% dan Kepuasan Kerja berpengaruh secara parsial dan signifikan terhadap Kinerja pegawai |

| | | | |
|---|---|---|---|
| | (2018) | Pegawai | |
| 2 | Suhroji Adha, Didi Wandi, Yanto Susanto (2019) | Kepuasan Kerja Terhadap Kinerja Pegawai | Terdapat hubungan yang signifikan antara Kepuasan Kerja dengan Kinerja Pegawai Dan untuk melihat Pengaruh antara Kepuasan Kerja terhadap Kinerja dengan menggunakan analisis regresi linier sederhana didapat nilai ignifikan (0,000) di bawah (lebih kecil dari) 0,05 dan nilai t hitung 3,920 > t tabel 1,997 artinya H0 ditolak, Variabel Kepuasan Kerja (X) berpengaruh secara positif dan signifikan terhadap Kinerja pegawai (Y), |
| 3 | Abdul Hamid dan Hazriyanto (2019) | Kepuasan Kerja Terhadap Kinerja Karyawan | Hasil penelitian ini mendapatkan adanya pengaruh Kepuasan kerja terhadap kinerja karyawan, Kepuasan kerja dan kinerja karyawan terbukti adanya hubungan yakni dari hasil analisis didapat koefisien P adalah senilai 0,369, Untuk mengetahui tingkat signifikansi koefisien β, dengan melihat hasil uji t yakni menunjukan t hitung sebesar 4,307> t table 1,98 dan 2,63 |
| 4 | Christian G, Makaluas R, J, Pio, H, J, Sumampouw (2018) | Kepuasan Kerja Terhadap Kinerja Karyawan | Kepuasan kerja memiliki pengaruh yang sangat kuat pengaruh dalam terciptanya kinerja karyawan, Nilai R (korelasi) yang dihasilkan menunjukkan bahwa hubungan antara dua variabel terebut sangat kuat, maka dapat dikatakan kepuasan kerja dan kepuasan kerja karyawan kinerja berhubungan positif artinya adalah variabel kemampuan kepuasan kerja dalam mempengaruhi kinerja karyawan di PT,BPR Prisma Dana Manado sangat besar |
| 5 | Iwan Kurnia Wijaya (2018) | Kepuasan Kerja Terhadap Kinerja Karyawan | Pengaruh kepuasan kerja terhadap kinerja karyawan adalah signifikan, Artinya hasil pengujian membuktikan bahwa kepuasan kerja terhadap kinerja karyawan terbukti, Hasil penelitian ini dapat dilihat bahwa dengan kepuasan kerja yang baik dari perusahaan akan |

| | | | |
|---|---|---|---|
| | | | meningkatkan kinerja karyawan, |
| 6 | Dina Febiyola (2019) | Kepuasan Kerja Terhadap Kinerja Karyawan | Kepuasan kerja adalah sikap emosional yang menyenangkan dan mencintai pekerjaannya, Sikap ini di cerminkan oleh moral kerja, kedisiplinan dan prestasi kerja, Kepuasan kerja memiliki pengaruh terhadap kinerja karyawan pada suatu organisasi atau lembaga, karna jika seorang karyawan puas akan kinerja yang dilakukannya maka kinerja yang dilakukan akan baik |

Hasil Penelitian tentang Hubungan Kepemimpinan Transformasional dengan Kinerja Pegawai

| No | Nama Peneliti dan Tahun | Variabel Penelitian | Hasil Penelitian |
|---|---|---|---|
| 1 | Devi Shinta Prahesti, I Gede Riana, I Made Artha Wibawa (2017) | Kepemimpinan Transformasional Terhadap Kinerja Karyawan Dengan *Ocb* Sebagai Variabel Mediasi | Hasil penelitian menunjukkan (1) kepemimpinan transformasional berpengaruh positif dan signifikan terhadap *OCB* (2) kepemimpinan transformasional berpengaruh positif dan signifikan terhadap kinerja karyawan (3) *OCB* berpengaruh positif dan signifikan terhadap kinerja karyawan (4) *OCB* memediasi secara parsial dan positif serta signifikan hubungan antara kepemimpinan transformasionaldan kinerja karyawan, |
| 2 | Dewiana Novitasari, Masduki Asbari (2020) | Kepemimpinan Transformasional terhadap Kinerja Karyawan | Hasil penelitian ini menyimpulkan bahwa kepemimpinan transformasional tidak berpengaruh signifikan terhadap kinerja karyawan, tetapi kepemimpinan transformasional berpengaruh positif dan |

| | | | |
|---|---|---|---|
| | | | signifikan terhadap kesiapan untuk berubah, |
| 3 | Syukron Sazly, Yolanda Ardiani (2019) | Kepemimpinan Transformasional terhadap Kinerja Pegawai | Hasil penelitian Pengaruh Kepemimpinan Transformasional, terhadap Kinerja Pegawai pada Kantor Kecamatan Cengkareng Barat Jakarta Barat" diperoleh hasil tingkat pengaruh sebesar 34,4% dan persamaan regresi yang dihasilkan dari penelitian ini yaitu Y = 22,799 + 1,679X yang berarti bahwa setiap peningkatan gaya kepemimpinan 1, maka kinerja pegawai juga akan meningkat sebesar 1,679 pada konstanta 22,79, |
| 4 | Ridho V, Manawan Riane J, Pio, Tinneke M, Tumbel (2017) | Kepemimpinan Transformasional terhadap Kinerja Karyawan | Kepemimpinan Transformasional memiliki pengaruh yang signifikan positif terhadap Kinerja Karyawan nilai t-hitung lebih besar dari t-tabel menunjukan bahwa hipotesis bisa di terima kebenarannya, Kepemimpinan Transformasional mempunyai pengaruh yang sangat kuat dalam mempengaruhi terciptanya kinerja karyawan secara optimal, nilai R (korelasi) yang dihasilkan maka dapat dikatakan bahwa Kepemimpinan Transformasional dan Kinerja karyawan berhubungan positif yang artinya adalah kemampuan |

| | | | |
|---|---|---|---|
| | | | variabel Kepemimpinan Transformasional dalam mempengaruhi Kinerja karyawan, Kinerja karyawan (Y) dapat dijelaskan oleh Kepemimpinan Transformasional melalui regresi, Hal ini berarti Konstanta mengandung arti bahwa nilai konsisten variabel Y dan Koefisien arah regresi menyatakan setiap penambahan 1% nilai X, maka nilai Y bertambah, Koefisien arah regresi tersebut bernilai positif, sehingga dapat dikatakan bahwa arah pengaruh variabel X dan variabel Y adalah positif, Dari hasil penelitian ini menunjukan Kepemimpinan Transformasional dibutukan seseorang pemimpin untuk merangsang karyawannya untuk bekerja lebih baik dan menjadikan karyawannya sebagai asset yang paling berharga dalam perusahaan, Bagi karyawan, memiliki seorang pemimpin yang mampubertransformasional dalam kepemimpinannya membuat karyawan menjadi termotifasi dan teransang untuk bekerja dengan baik untuk kemajuan perusahan, |
| 5, | Muhammad Alief | Kepemimpinan | kepemimpinan |

| | | | |
|---|---|---|---|
| | Ramadhani (2021) | Transformasional terhadap Kinerja Karyawan Melalui Otonomi Kerja | transformasional berpengaruh secara positif signifikan terhadap kinerja karyawan yang berarti bahwa semakin intens penerapan kepemimpinan transformasional maka akan berdampak pada semakin meningkatnya kinerja karyawan, Kepemimpinan transformasional juga didapati berpengaruh positif signifikan terhadap otonomi kerja karyawan, Hal ini berarti bahwa semakin intens penerapan kepemimpinan transformasional maka kemampuan otonomi kerja karyawan akan semakin optimal, Otonomi kerja berpengaruh signifikan positif terhadap kinerja karyawan, |

Hasil Penelitian tentang Hubungan Motivasi Kerja dengan Kinerja Pegawai

| No | Nama Peneliti dan Tahun | Variabel Penelitian | HasilPenelitian |
|---|---|---|---|
| 1 | Febriyani Finda Kapahang, Arie Rorong, Gustaf Tampi (2015) | Motivasi terhadap kinerja pegawai | Motivasi berpengaruh dan punya korelasi yang signifikan terhadap kinerja pegawai, Motivasi merupakan faktor penting dan menentukan kinerja pegawai pegawai dalam instansi pemerintahan |
| 2 | Lidya Seventina Ompusunggu, Kusmiyanti (2021) | Motivasi kerja terhadap kinerja pegawai | Hasil penelitian uji t (siginifikansi) didapatkan bahwa nilai t hitung > t tabel (5,681 > 2,024) dengan perolehan perbandingan signifikansi yaitu 0,000 |

| | | | |
|---|---|---|---|
| | | | < 0,05, Hal ini berarti terdapat pengaruh variabel Motivasi Kerja terhadap Kinerja, Dapat disimpulkan bahwa terdapat hubungan yang positif dan signifikan antara Motivasi Kerja terhadap Kinerja pegawai |
| 3, | P, Ayu Asri Wulandari, I W, Bagia (2020) | Motivasi kerja terhadap kinerja | Ada pengaruh positif dari motivasi kerja terhadap kinerja pegawai pada Puskesmas Seririt III, Berdasarkan koefisien determinasi, motivasi kerja mempengaruhi kinerja sebesar 68,8% dan sisanya sebesar 31,2% dipengaruhi oleh variabel lain yang tidak diteliti dalam penelitian ini, |
| 4, | Rangga Mahardhika, Djamhur Hamid, Ika Ruhana (2016) | Motivasi Kerja terhadap kinerja karyawan | Motivasi intrinsik berpengaruh signifikan terhadap kinerja karyawan dan merupakan variabel yang dominan berpengaruh terhadap kinerja karyawan, ditunjukkan dengan nilai signifikansi t lebih kecil dari D = 0,5 (0,000 < 0,05) dan memiliki nilai koefisien regresi sebesar 0,514 lebih besar dibandingkan motivasi ekstrinsik, Motivasi ekstrinsik berpengaruh signifikan terhadap kinerja karyawan, ditunjukkan dengan |

| | | | |
|---|---|---|---|
| | | | nilai signifikansi t lebih kecil dari D = 0,5 (0,000 < 0,05), Sehingga disimpulkan motivasi berpengaruh singifikan terhadap kinerja karyawan, |
| 5 | Ma'ruf, Ummul Chair (2020) | Motivasi kerja terhadap kinerja karyawan | Hasil penelitian menunjukkan persamaan regresi linear sederhana Y = 9,186 + 0,590 (X), hal ini berarti bahwa jika X = 0, maka Y tetap 9,186 dan positif (+) artinya searah / sejalan, jika X meningkat maka Y juga meningkat begitupun sebaliknya dan setiap terjadi perubahan atau peningkatan sebesar satu unit pada variabel motivasi kerja maka akan di ikuti oleh perubahan peningkatan rata – rata variabel kinerja karyawan sebesar 0,590, Kemudian untuk koefisien korelasi menunjukkan hubungan yang tinggi antara motivasi kerja dengan kinerja karyawan dengan nilai 0,610, Pada koefisien determinasi di peroleh nilai sebesar 0,372 yang artinya pengaruh motivasi kerja terhadap kinerja karyawan sebesar 37,2%, Untuk pengujian hipotesis melalui uji t menunjukkan di mana variabel motivasi kerja |

| | | | |
|---|---|---|---|
| | | | berpengaruh signifikan terhadap kinerja karyawan |

Hasil Penelitian tentang Hubungan Seleksi Terbuka melalui Motivasi Kerja dengan Kinerja Pegawai

| No | Nama Peneliti dan Tahun | Variabel Penelitian | Hasil Penelitian |
|---|---|---|---|
| 1 | Rizky Hafiz Syahputra (2016) | Seleksi, penempatan kerja dan motivasi kerja | Seleksi karyawan dan penempatan karyawan memiliki pengaruh terhadap motivasi karyawan |
| 2 | Rillopan Budi Ardhi Yanto, Vera Sylvia Saragi Sitio (2020) | Rekrutmen, seleksi dan motivasi terhadap kinerja karyawan | Hasil penelitian ini menunjukan bahwa secara parsial variabel rekrutmen berpengaruh positif dan signifikan terhadap kinerja, variabel seleksi berpengaruh positif dan signifikan terhadap kinerja dan variabel motivasi berpengaruh secara positif dan signifikan terhadap kinerja, Secara simultan variabel rekrutmen, seleksi dan motivasi berpengaruh signifikan terhadap kinerja, Jika dilihat dari hasil koefisien determinasi maka diperoleh 58,3% kinerja dipengaruhi oleh rekrutmen, seleksi dan motivasi sedangkan sisanya sebesar 41,7% dipengaruhi oleh variasi variabel-variabel lain yang tidak dimasukan dalam penelitian ini, |
| 3 | Tarwijo (2018) | Rekrutmen, seleksi, | Hasil penelitian dapat |

| | | | |
|---|---|---|---|
| | | dan motivasi terhadap kinerja karyawan | disimpulkan Terdapat pengaruh yang signifikan antara rekrutmen dengan kinerja karyawan dengan hasil uji t, dimana t-hitung > t-tabel yaitu 2,214 > 1,660 dengan taraf signifikansi 0,029 <0,05, Terdapat pengaruh yang signifikan antara seleksi dengan kinerja karyawan, yang ditunjukkan dengan hasil uji t, dimana t-hitung > t-tabelyaitu 2,833 > 1,660 dengan taraf signifikansi 0,006< 0,05, Terdapat pengaruh yang signifikan antara motivasi terhadap kinerja karyawan yang ditunjukkan dengan hasil uji t, dimana t-hitung > t-tabel, yaitu: 3,353 > 1,660 dengan taraf signifikansi 0,001 < 0,05, Hasil uji secara simultan atau secara bersama-sama ketiga variable bebas, yaitu rekrutmen, seleksi, dan motivasi memiliki nilai positif dan berpengaruh secara signifikan terhadap kinerja karyawan dengan nilai F-hitung >F-tabel yaitu 18,759 >2,695 dan nilai Sig 0,000 < 0,05dan ketiga variabel bebas |

| | | | |
|---|---|---|---|
| | | | tersebut memberikan kontribusi sebesar 34,8% terhadap kinerja, |
| 4 | Agustina, Rahmi Widiyanti, Aida Vitria (2020) | Seleksi karyawan dan motivasi kerja terhadap kinerja karyawan | Hasil menunjukan bahwa seleksi karyawan dan motivasi kerja berpengaruh positif dan signifikan, Hal ini ditunjukan dengan nilai t hitung> t tabel dan memiliki hasil signifikansi 0,000<0,05, Hasil uji F menunjukan bahwa seleksi karyawan dan motivasi kerja secara simultan berpengaruh positif dan signifikan terhadap kinerja karyawan, Hal ini menunjukan dengan nilai F hitung 35,187 yang berarti nilai F hitung > dari F tabel 3,13 dengan taraf kesalahan 5% sehingga didapatkan hasil yang signifikan 0,000<0,05, Dari hasil uji koefisien determinasi menunjukan bahwa Adjusted R Square yang besarnya 0,487 menunjukan bahwa proporsi pengaruh variabel seleksi karyawan dan motivasi kerja memiliki proporsi pengaruh terhadap kinerja karyawan sebesar 48,7% sedangkan sisanya 51,3% dipengaruhi oleh variabel lain yang tidak termasuk dalam penelitian ini, |

Hasil Penelitian tentang Hubungan Kepemimpinan Transformasional melalui Motivasi Kerja dengan Kinerja Pegawai

| No | Nama Peneliti dan Tahun | Variabel Penelitian | Hasil Penelitian |
|---|---|---|---|
| 1 | Omar Hendro, Trisniarty, AM, RZ, Rahman (2020) | Kepemimpinan, Motivasi Kerja dan Rekrutmen Terhadap Kinerja | Kepemimpinan, motivasi, dan rekrutmen secara bersama-sama berpengaruh positif dan signifikan terhadap kinerja Karyawan, Kedua, kepemimpinan berpengaruh positif dan signifikan terhadap kinerja Karyawan, Ketiga, motivasi berpengaruh positif dan signifikan terhadap kinerja Karyawan, Keempat, rekrutmen berpengaruh positif dan signifikan terhadap kinerja Karyawan |
| 2 | Nyoman Suryani Putu Yusi Pramandari (2016) | Pengaruh Kepemimpinan Transformasional dan Motivasi Kerja terhadap Kinerja Karyawan | Hasil menunjukkan bahwa ada hubungan yang kuat dan positif antara kepemimpinan transformasional (X1) dan motivasi (X2) pada karyawan kinerja (Y), Hasil penelitian juga menunjukkan bahwa kedua variabel ini bersifat parsial terpengaruh, serta motivasi karyawan memiliki pengaruh yang lebih dominan terhadap kinerja karyawan, |
| 3 | Rony Edward (2016) | Pengaruh Kepemimpinan Transformasional dan Motivasi Kerja terhadap | Hasil uji statistik dengan menggunakan analisis regresi berganda menunjukkan bahwa kepemimpinan |

| | | | |
|---|---|---|---|
| | | Kinerja Karyawan | transformasional dan motivasi kerja berpengaruh signifikan terhadap kinerja karyawan PT, Waruna Nusa Sentana, Adapun pengaruh kepemimpinan transformasional dan motivasi kerja terhadap kinerja karyawan adalah sebesar 63,4% dan sisanya sebesar 36,6% dipengaruhi oleh faktor lainnya |
| 4 | Adhie Fasha Nurhadian (2017) | Pengaruh Kepemimpinan Transformasional dan Motivasi Kerja terhadap Kinerja Karyawan | Hasil menunjukkan bahwa terdapat pengaruh yang signifikan antara kepemimpinan transformasi dan motivasi terhadap kinerja karyawan baik sebagian maupun secara bersamaan, Kepemimpinan transformasional memberikan kontribusi 33,22%, sedangkan motivasi memberikan kontribusi 28,95%, dengan demikian secara simultan pengaruh kepemimpinan transformasional dan motivasi terhadap kinerja pegawai sebesar 62,18%, Hasil ini menunjukkan bahwa pengaruh ketiga variabel tersebut signifikan, sedangkan sisanya ditentukan oleh variabel lain yang tidak diteliti dalam penelitian ini, |

Hasil Penelitian tentang Hubungan Kepuasan Kerja melalui Motivasi Kerja dengan Kinerja Pegawai

| No | Nama Peneliti dan Tahun | Variabel Penelitian | Hasil Penelitian |
|---|---|---|---|
| 1 | Agung Rido Harmoko (2019) | Kepuasan Kerja dan Motivasi Bekerja terhadap Kinerja | Ada hubungan yang signifikan dengan arah positif antara kepuasan kerja dan motivasi kerja terhadap kinerja pekerja adanya pengaruh kepuasan kerja dan motivasi kerja terhadap kinerja |
| 2 | Garry Surya Changgriawan (2017) | Pengaruh Kepuasan Kerja dan Motivasi Kerja terhadap Kinerja Karyawan Di One Way Production | Kepuasan kerja berpengaruh signifikan terhadap kinerja karyawan di *oneway* Production<br>Motivasi kerja tidak berpengaruh signifikan terhadap kinerja karyawan di OneWay Production<br>Kepuasan kerja memiliki pengaruh yang lebih besar daripada motivasi kerja terhadap kinerja karyawan |
| 3 | Ali Fathoni (2016) | Pengaruh Kepuasan Kerja dan Motivasi Kerja terhadap Kinerja Karyawan Pada Pt, Bank Rakyat Indonesia Unit Kecamatan Pucuk Kabupaten Lamongan | Motivasi kerja yang mempunyai pengaruh yang lebih dominan terhadap kinerja karyawan, kepuasan kerja dan motivasi kerja berpengaruh secara parsial terhadap kinerja karyawan dan kepuasan kerja dan motivasi kerja berpengaruh secara simultan terhadap kinerja karyawan pada PT, Bank unit BRI Pucuk Lamongan |
| 4 | Reina Poetri Narulita, Anne Charina (2020) | Impacts Of Job Satisfaction and | Hasil dari penelitian ini menunjukkan bahwa |

| | | | |
|---|---|---|---|
| | | Work Motivation on Employee Performance, A Case Study at Bumi Saba Indonesia Company | tingkat kepuasan dan kinerja karyawan BSI tergolong sedang, Lalu motivasi karyawan BSI bekerja yaitu didominasi dengan jawaban untuk mendapatkan kebutuhan fisiologis, rasa aman, dan sosial, Selain itu kepuasan dan motivasi secara simultan memiliki pengaruh terhadap kinerja karyawan, namun secara parsial hanya kepuasan yang berpengaruh terhadap kinerja |
| 5 | Tjiong Fei Lie Hotlan Siagian (2018) | Pengaruh Kepuasan Kerja Terhadap Kinerja Karyawan Melalui Motivasi Kerja Pada CV, Union Event Planner | Kepuasan kerja berpengaruh terhadap motivasi kerja dengan nilai koefisien sebesar 0,721 dan t statistik 15,465,<br>Motivasi kerja berpengaruh terhadap kinerja karyawan dengan nilai koefisien sebesar 0,327 dan t statistik 2,497, Semakin tinggi motivasi kerja, maka kinerja dari karyawan akan semakin meningkat secara signifikan,<br>Kepuasan kerja berpengaruh terhadap kinerja karyawan dengan nilai koefisien sebesar 0,540 dan t statistik 3,637, Artinya semakin tinggi tingkat kepuasan karyawan, maka kinerja akan semakin meningkat, |

Hasil Penelitian tentang Hubungan Seleksi Terbuka, Kepemimpinan Transformasional, Kepuasan Kerja dengan Motivasi Kerja

| No | Nama Peneliti dan Tahun | Variabel Penelitian | Hasil Penelitian |
|---|---|---|---|
| 1 | Berta (2012) | Kepemimpinan Transformasional dan Kepuasan Kerja Terhadap Motivasi Kerja dan Kinerja | Kepemimpinan transformasional dan kepuasan kerja berpengaruh positif dan signifikan terhadap motivasi kerja dan kinerja karyawan tetap PT, Alas Kusuma Group, SJM Ketapang di Kalimantan Barat, Hasil analisis total pengaruh kepemimpinan transformasional terhadap kinerja karyawan adalah sebesar 1,074 yang berarti ada pengaruh langsung maupun tidak langsung kepemimpinan transformasional terhadap kinerja karyawan melalui motivasi kerja, Hasil analisis total pengaruh langsung maupun tidak langsung kepuasan kerja terhadap kinerja karyawan adalah sebesar 1,000 yang berarti ada pengaruh langsung maupun tidak langsung kepuasan kerja terhadap kinerja karyawan melalui motivasi kerja, |
| 2 | Robin Subowo dan Roy Setiawan (2015) | Kepemimpinan Transformasional, Motivasi Kerja, Kepuasan Kerja Karayawan | Hasil penelitian menunjukan bahwa kepemimpinan transformasional dan motivasi kerja mampu memberikan kontribusi terhadap kepuasan kerja sebesar 62,5%, Ketika diuji secara simultan dan parsial hasilnya menunjukan bahwa kepemimpinan transformasional dan motivasi kerja memiliki pengaruh signifikan terhadap kepuasan kerja karyawan, |
| 3 | Widiah Nur Wahyuni (2017) | Kepemimpinan Transformasional dan Kepuasan Kerja terhadap Motivasi Pegawai | Kepemimpinan transformasional berpengaruh langsung positif terhadap motivasi berprestasi, Artinya ketepatan dalam kepemimpinan transformasional mengakibatkan peningkatan motivasi berprestasi pegawai, Kepuasan kerja berpengaruh langsung positif |

| | | | |
|---|---|---|---|
| | | | terhadap motivasi berprestasi, Artinya peningkatan kepuasan kerja mengakibatkan peningkatan motivasi pegawai, Kepemimpinan transformasional berpengaruh langsung positif terhadap kepuasan kerja, Artinya ketepatan dalam kepemimpinan transformasional mengakibatkan peningkatan kepuasan kerja pegawai |

Hasil Penelitian tentang Hubungan Seleksi Terbuka, Kepemimpinan Transformasional, Kepuasan Kerja dan Motivasi Kerja dengan Kinerja

| No | Nama Peneliti dan Tahun | Variabel Penelitian | Hasil Penelitian |
|---|---|---|---|
| 1 | Aisyah and Giovann | Rekrutmen, seleksi dan kinerja pegawai | Adanya hubungan rekrutmen dan seleksi terhadap kinerja yang sangat kuat yaitu sebesar 0,887 (88,7%) adanya pengaruh rekrutmen dan seleksi terhadap kinerja, Besarnya angka koefisien determinasi 0,786 atau sama dengan 78,6%, sedangkan sisanya yaitu 21,4% (100%-78,6%) dijelaskan oleh faktor-faktor penyebab lainnya dan tingkat signifikan sebesar 0,000 maka H1 diterima, persamaan regresi signifikan, sehingga persamaan regresi yang dapat dibentuk yaitu: Y = 7,722 + 0,802X, oleh karena itu tingkat motivasi yang ada harus tetap dipertahankan dan harus lebih ditingkatkan lagi khususnya pada kinerja karyawan itu sendiri |
| 2 | Muhammad Tafrizi Priarso Prastiyo Diatmono | Kepemimpinan transformasional, motivasi kerja dan kinerja | Ada pengaruh yang signifikan antara gaya kepemimpinan transformasional terhadap kinerja karyawan melalui kepuasan kerja, Pengaruh tidak langsung secara positif tingkat |

| | | | |
|---|---|---|---|
| | and Siti Mariam (2018) | | kepuasan kerja yang dirasakan karyawan, gaya kepemimpinan transformasional akan semakin mampu meningkatkan kinerja atau hasil kerja menjadi dicapai oleh karyawan, Ada pengaruh yang signifikan antara motivasi kerja terhadap karyawan kinerja melalui kepuasan kerja, Pengaruh tidak langsung secara positif berarti semakin tinggi tingkat kepuasan kerja yang dirasakan karyawan, maka motivasi kerja karyawan akan semakin mampu meningkatkan kinerja atau hasil kerja yang ingin dicapai oleh karyawan, Pengaruh tidak langsung positif berarti semakin tinggi tingkat kepuasan kerja yang dirasakan karyawan disertai dengan kenyamanan bekerja lingkungan, maka semakin baik kinerja atau hasil kerja yang ingin dicapai |
| 3 | Slamet Wijayanto, Ghufron Abdullah, Endang Wuryandini (2021) | Pengaruh gaya kepemimpinan transformasional, motivasi kerja, dan kepuasan kerja terhadap kinerja guru sekolah dasar | Hasil uji F hitung 120,311 dengan nilai signifikansi 0,000<0,05, berarti ada pengaruh signifikan dan positif ga-ya kepemimpinan transformasional, motivasi kerja, dan kepuasan kerja terhadap ki-nerja guru, Dari uji parsial, diperoleh nilai signifikansi gaya kepemimpinan transfor-masional 0,001, motivasi kerja 0,000, dan kepuasan kerja 0,000< 0,05, |
| 4 | Ardityas Gema Sasongko, Hairudinor dan Muhammad Riduansyah Syafari (20200 | Pengaruh Budaya Organisasi, Motivasi Kerja Dan Gaya Kepemimpinan Transformasional Terhadap Kinerja Karyawan Dengan Kepuasan Kerja Sebagai Variabel Intervening Di Mining Support Division PT Kaltim Prima Coal | Hasil penelitian menunjukkan pengaruh budaya organisasi terhadap kepuasan kerja positif tetapi tidak signifikan, pengaruh motivasi dan gaya kepemimpinan transfomasional terhadap kepuasan kerja positif dan signifikan; pengaruh budaya organisasi terhadap kinerja pegawai tidak signifikan dan positif; pengaruh motivasi dan gaya kepemimpinan transformasional terhadap kinerja pegawai adalah signifikan dan positif; dan pengaruh kepuasan kerja terhadap kinerja karyawan adalah signifikan |

| | | | |
|---|---|---|---|
| | | | dan positif |
| 5 | Gilang Pratama, Elistia (2020) | Kepemimpinan Transformasional dan Kepuasan Kerja Terhadap Motivasi Kerja dan Kinerja Karyawan | Kepemimpinan transformasional dan motivasi kerja mempengaruhi kinerja pegawai dan kepuasan kerja mampu memediasi kinerja pegawai |

**Lampiran 12 Riwayat Singkat Penulis**

I KETUT SUKRA NEGARA, lahir di Jembrana 29 Nopember 1968, merupakan anak ke 4 dari 5 bersaudara yang lahir dari pasangan I Wayan Widia dengan Ni Nyoman Sukanthi. Mengikuti pendidikan dari TK hingga SLTA di Negara. TK Bayangkari Negara tamat tahun 1976, lanjut ke SD 4 Pendem Negara tamat tahun 1982, lanjut ke SMPN 1 Negara tamat tahun 1985, lanjut ke SMAN 1 Negara tamat tahun 1988. Melanjutkan ke Sekolah kedinasan APDN Mataram tamat Tahun 1991, lanjut kejenjang S1 di Universitas Mahendradatta dan lulus Tahun 1995. Pada tahun 2001 diberikan kesempatan untuk melanjutkan ke jenjang Pasca Sarjana S2 melalui program tugas belajar ke Magister Administrasi Publik UGM Jogjakarta dan lulus tahun 2003. Tahun 2019 mendapatkan ijin belajar dari Gubernur Bali untuk melanjutkan studi ke jenjang S3 (Doktoral) pada Universitas Pendidikan Ganesha dengan Program Studi Ilmu Pendidikan Konsentrasi Administrasi Pendidikan. Memulai karier sebagai Lurah Gilimanuk Jembrana Tahun 1993 sampai dengan 1999, setelah menyelesaikan tugas belajar pada Program Pasca Sarjana UGM mulai bertugas di Pemerintah Provinsi Bali sebagai staf di Bappeda, dan cukup lama bertugas sebagai kepala bagian/kepala bidang di beberapa posisi pada OPD Pemerintah Provinsi Bali. Sedangkan saat ini ditugaskan sebagai Kepala Biro Pemerintahan dan Kesra Setda Provinsi Bali. Mengikuti seminar internasional sebagai presenter pada *in The 5$^{th}$ International Conference on Learning Innovation and Quality Education,* Surakarta, 4 September 2021 dan *In The International Seminar, organized by Doctor of education study Program Postgraduate, Ganesha University of Educatio in Collaboration with* Perkumpulan Program Studi Doktor Pendidikan. Aktif sebagai Pembina Yayasan Kebaktian Proklamasi di Denpasar , Ketua Komite pada SMA PGRI 3 Denpasar, Wakil Ketua IKAPTK (Ikatan Keluarga Pendidikan Tinggi Kepamongprajaan) Provinsi Bali dan Pengurus pada organisasi KAGAMA Provinsi Bali. Menikah pada tahun 1997 dengan Ni Wayan Yudiartini, SE yang saat ini bekerja sebagai Komisioner KPI Provinsi Bali dan dikaruniai 2 orang putri. Bertugas cukup lama pada Badan Pengembangan Sumber Daya Manusia Provinsi Bali dan pada Badan Kepegawaian Daerah Provinsi Bali memahami betul kondisi psikologi pegawai saat sistem pengembangan dan promosi pegawai dilaksanakan secara tertutup. Reformasi birokrasi membawa paradigma baru pengembangan birokrasi dengan diterapkannya sistem seleksi terbuka dalam pengisian Jabatan Pimpintan Tinggi. Hal ini menjadi angin segar bagi PNS dalam meningkatkan kompetensi, karier, sehingga kepuasan kerja pegawai dapat ditingkatkan, kepemimpinan transformasional dapat berkembang dengan baik, motivasi pegawai meningkat dan kinerja pegawai dapat terwujud.